Scale 1:1
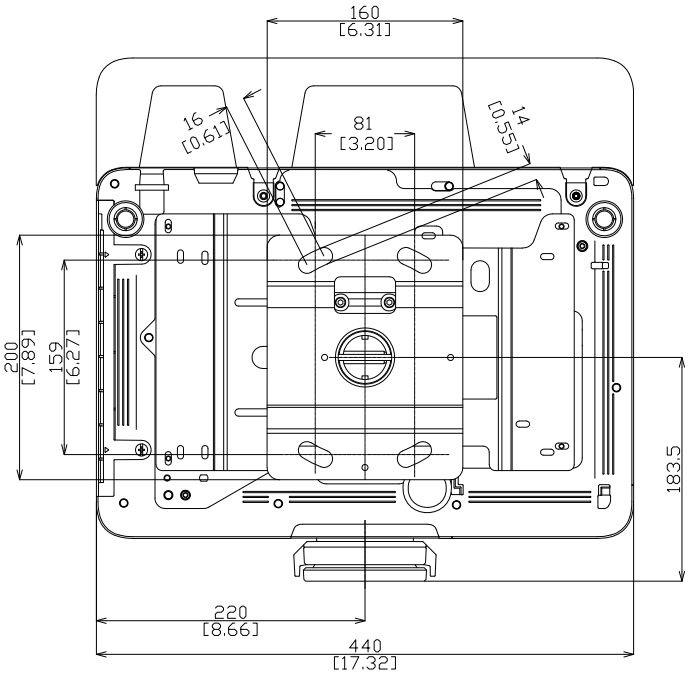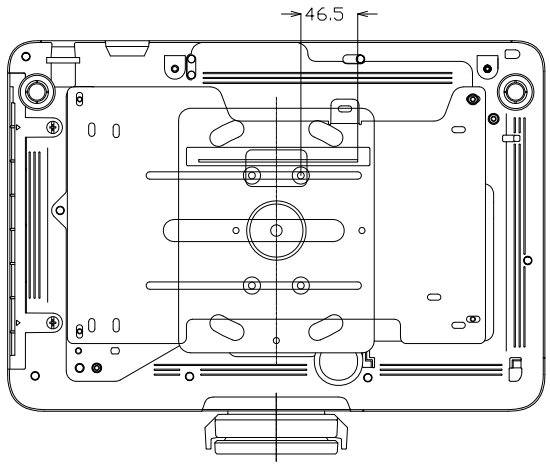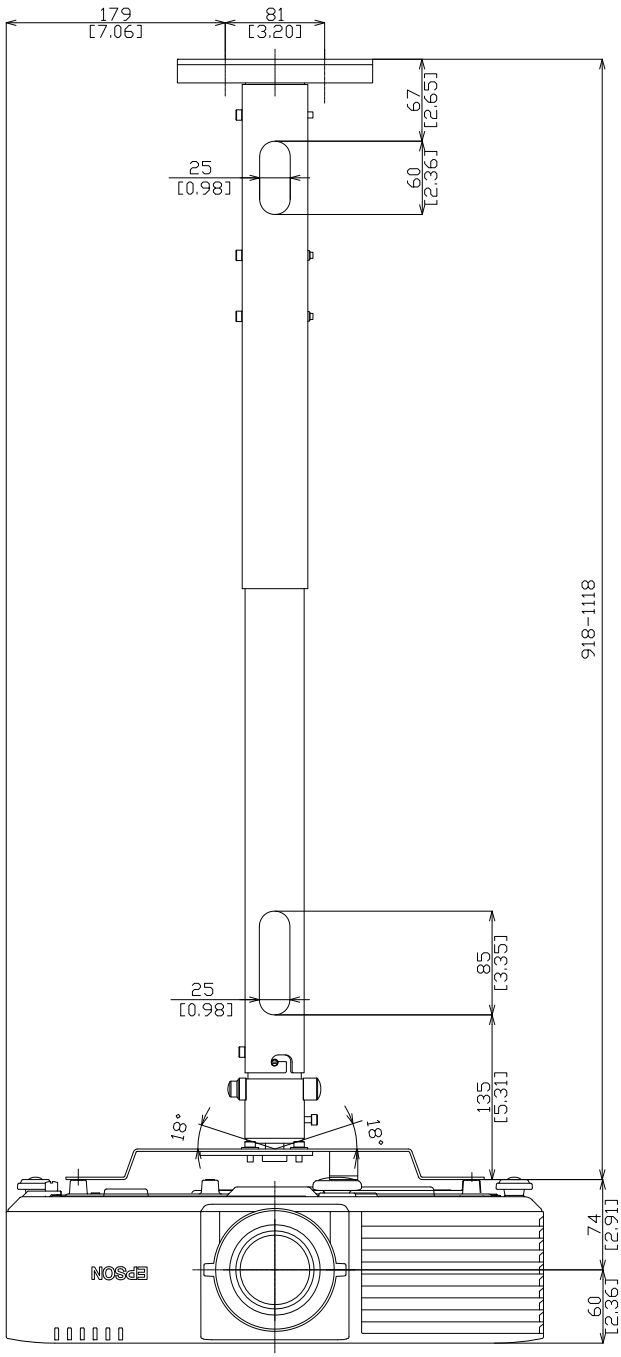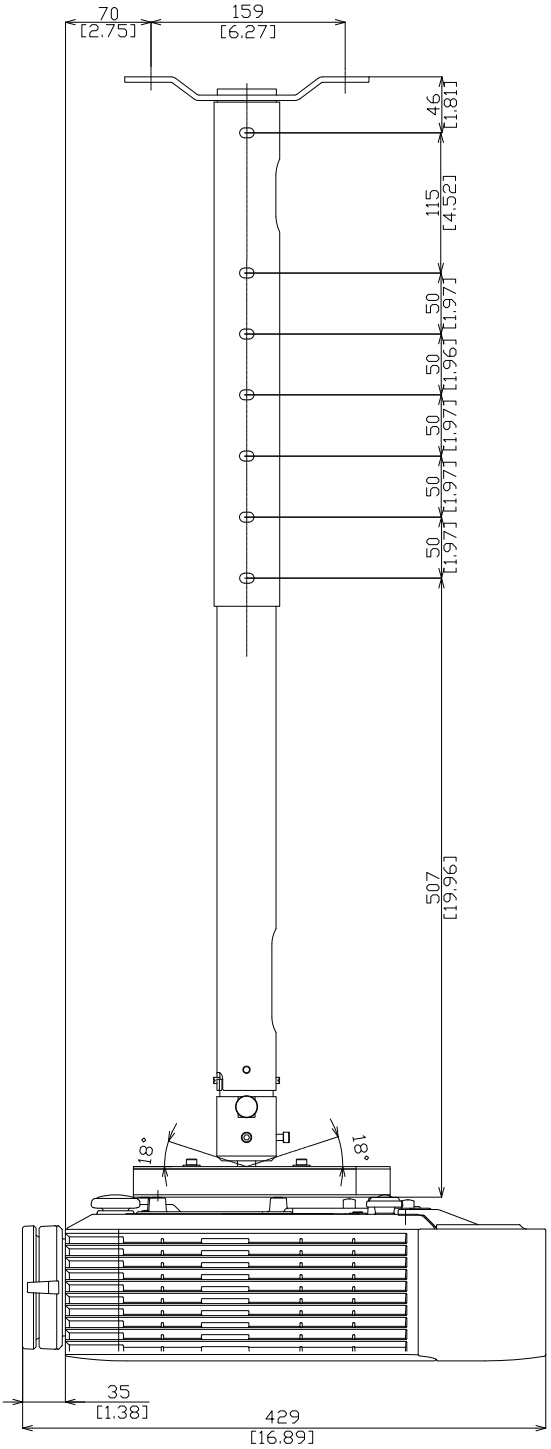
Notes
Unit of dimension
Upper : mm
Lower : inch