Scail/1:5

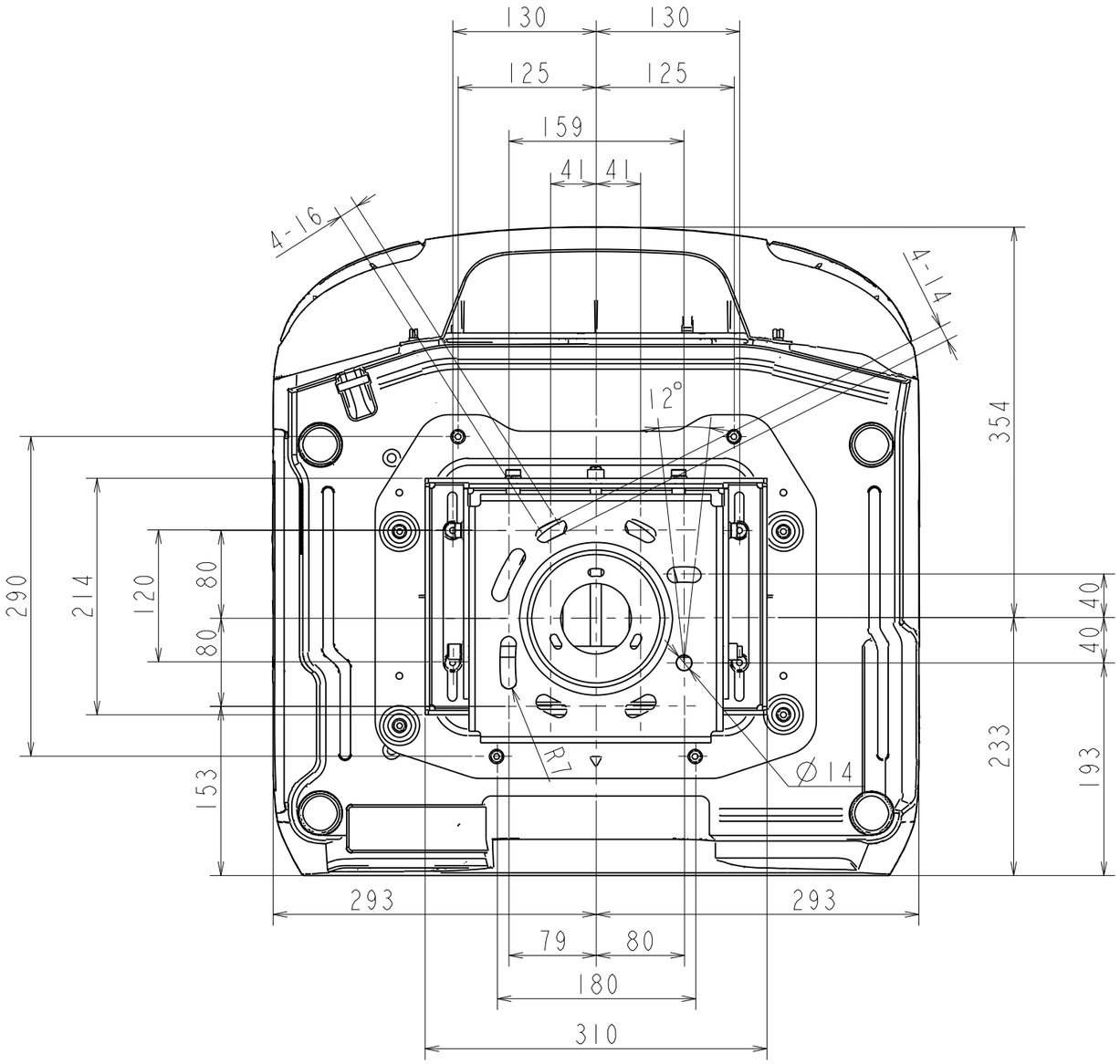

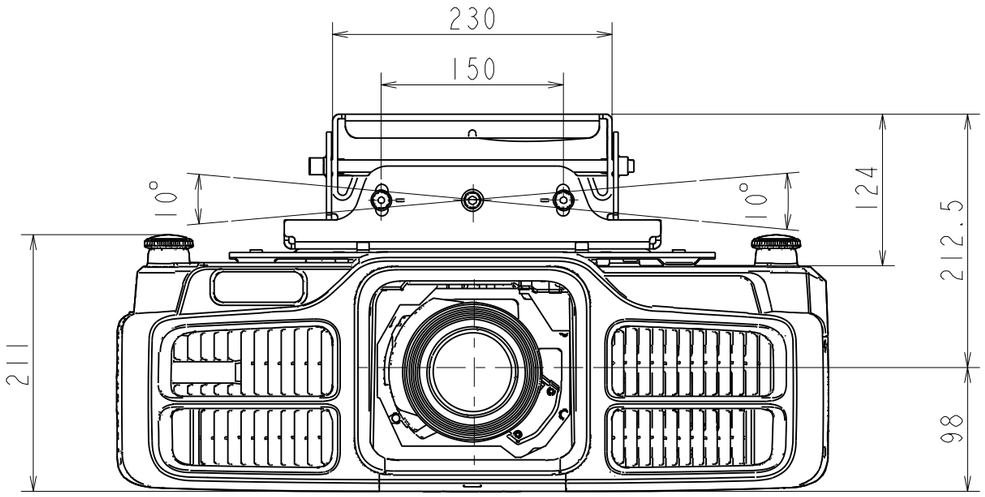

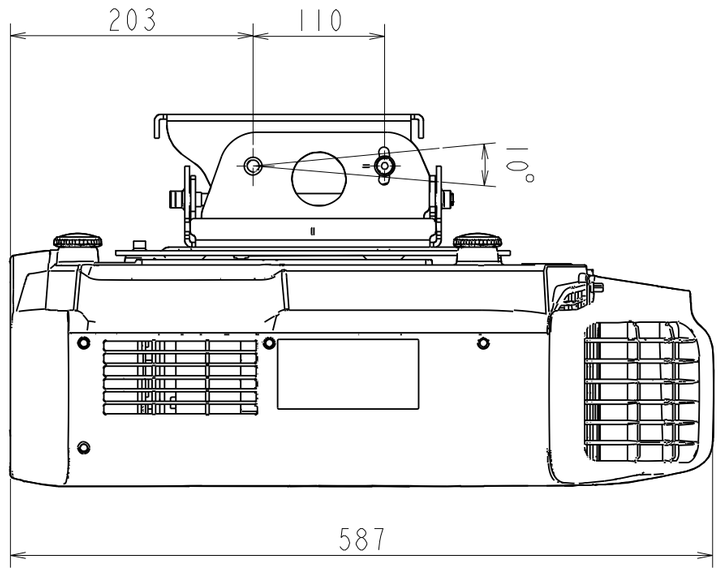

Creator

Nurullah Kantar