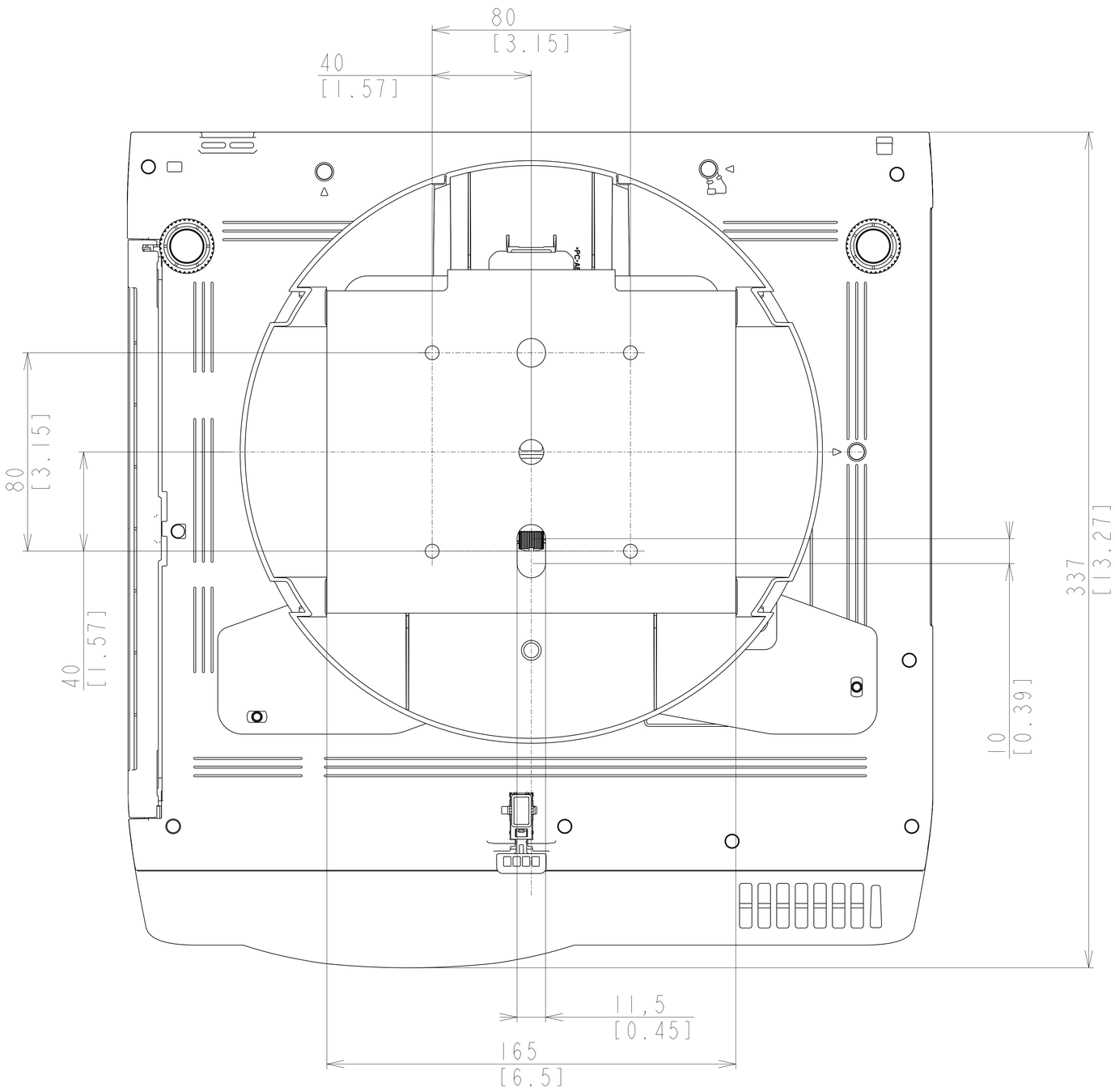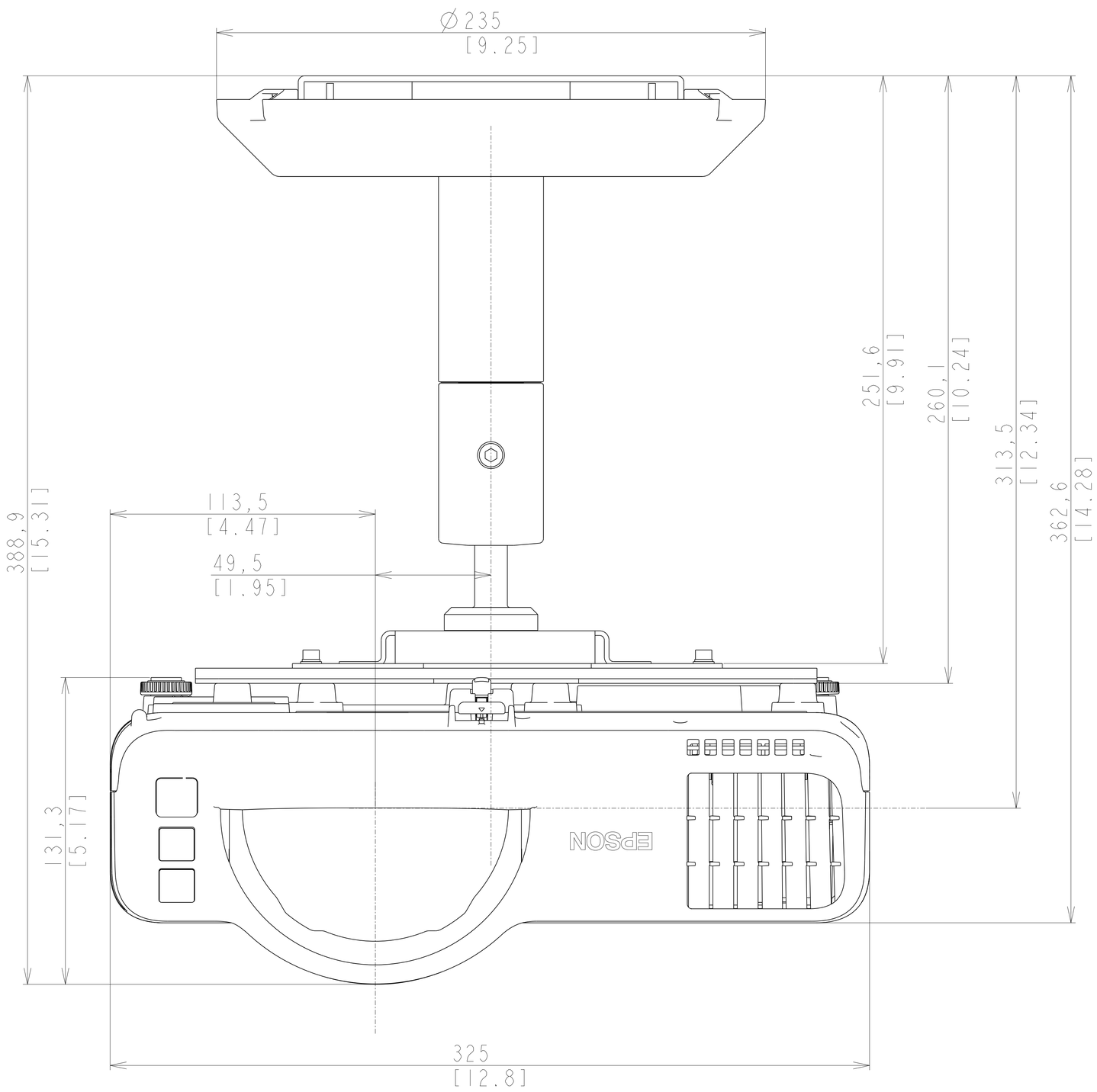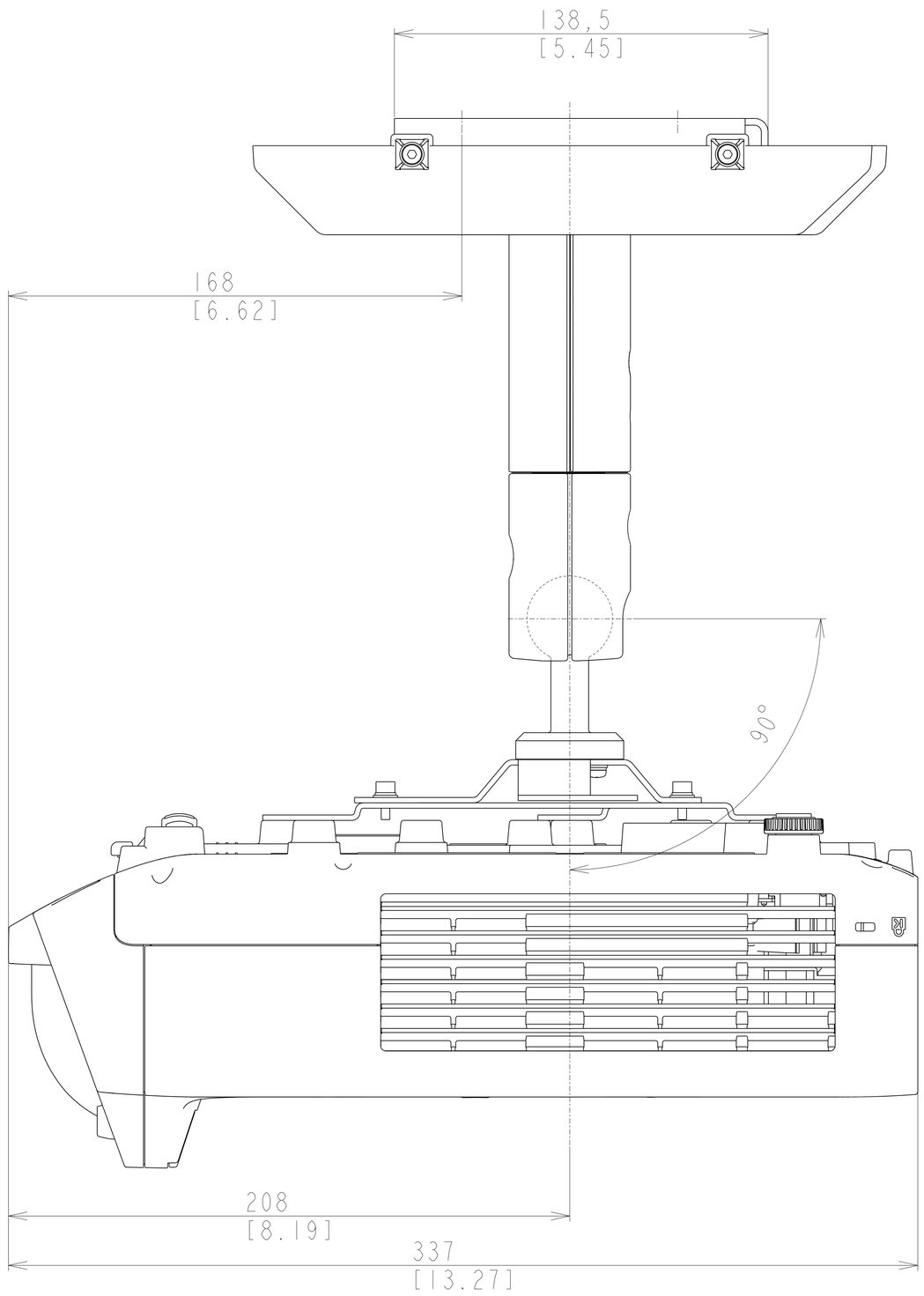Notes
Unit of dimension
Upper: mm
Lower: inch