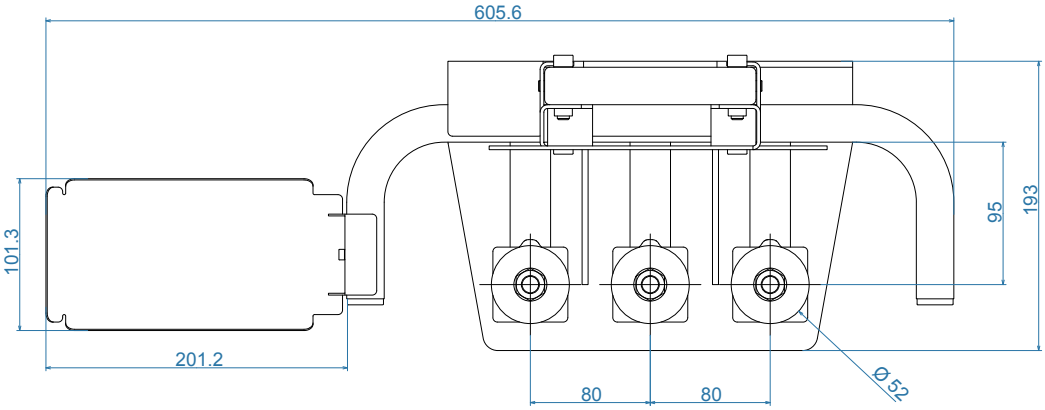
605.6
101.3
201.2
95
193
80
80
Ø 52

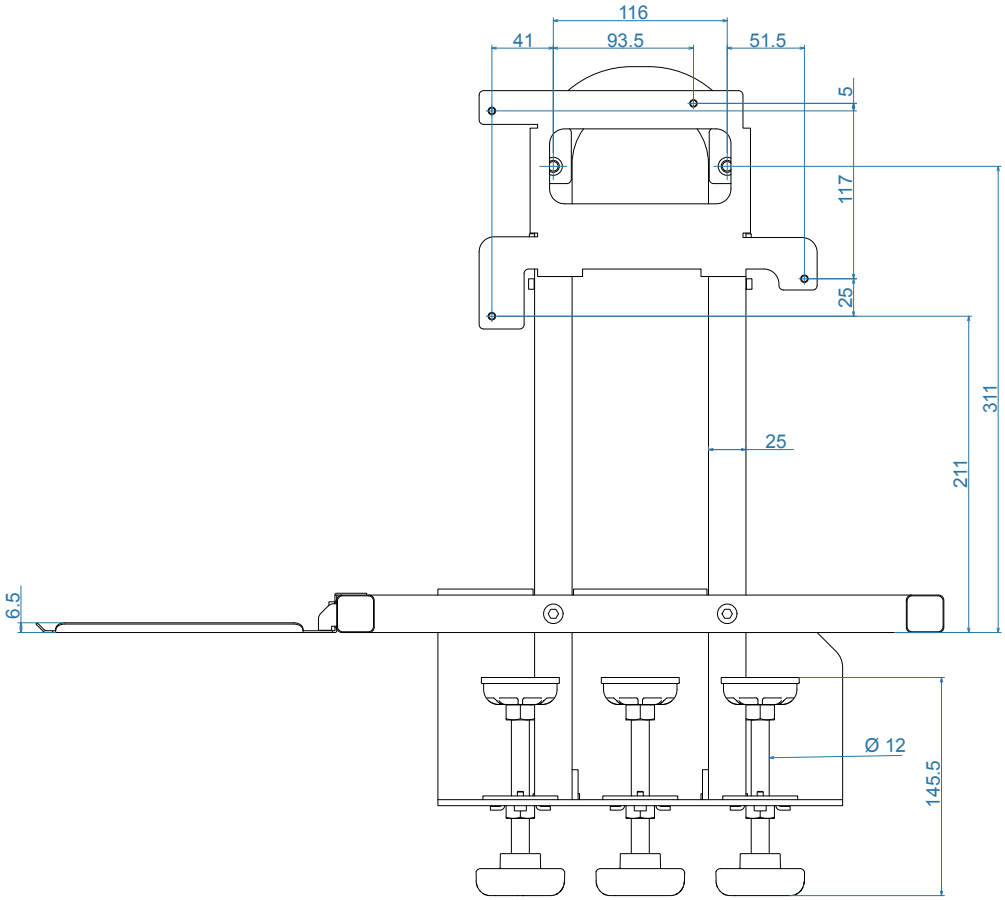
116
41
93.5
51.5
5
117
25
311
25
211
6.5
Ø 12
145.5

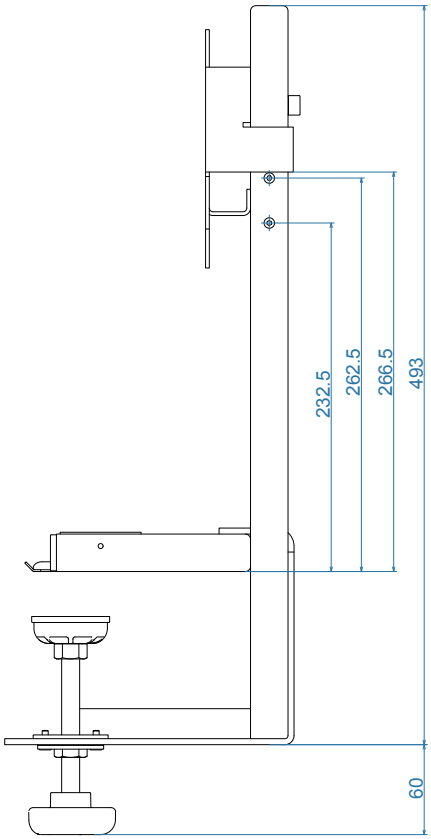
232.5
262.5
266.5
493
60