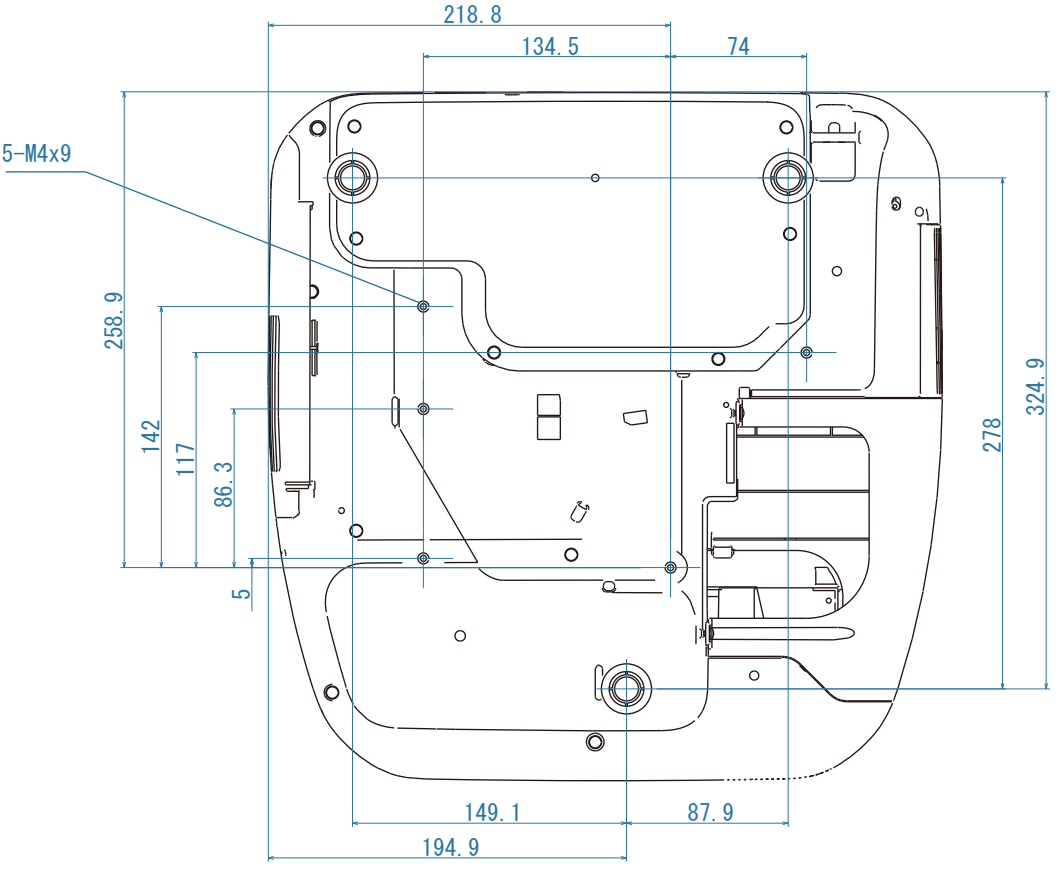
218.8
134.5
74
5-M4x9
258.9
142
117
86.3
5
278
324.9
149.1
87.9
194.9

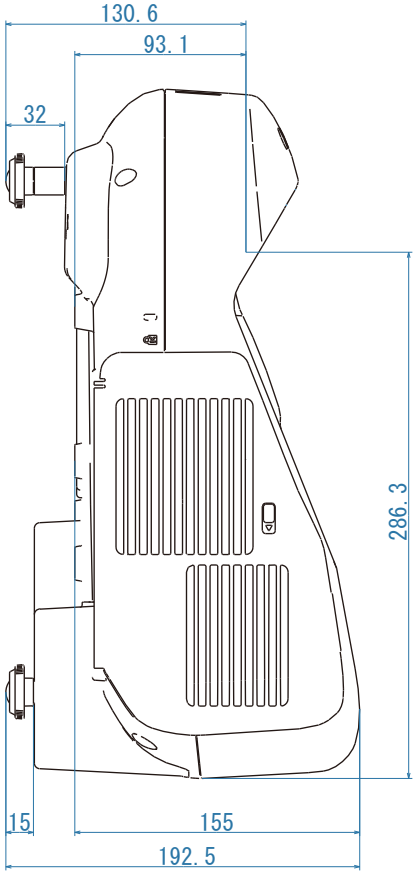
130.6
93.1
32
286.3
15
155
192.5

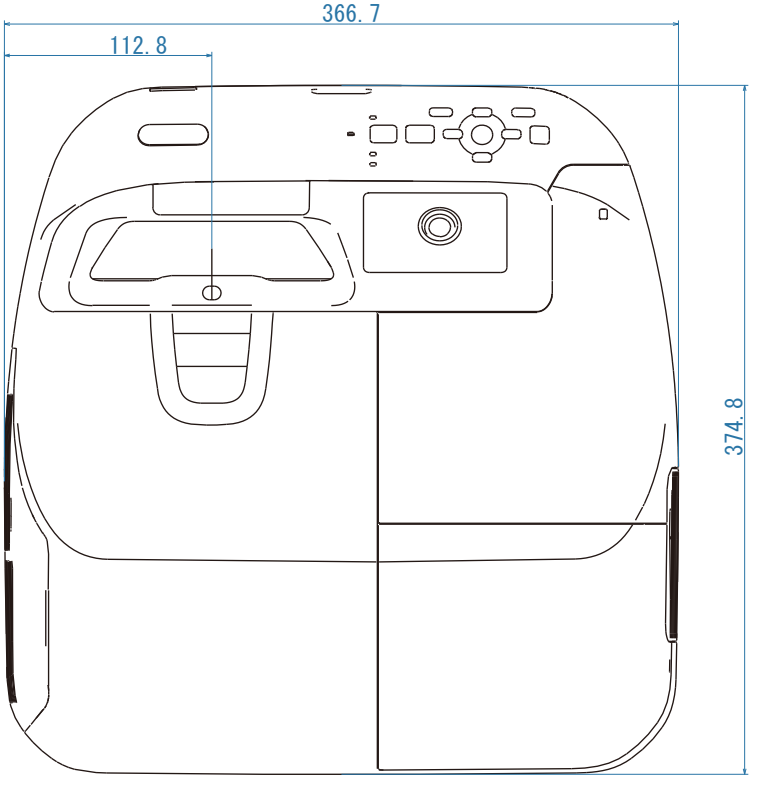
366.7
112.8
374.8