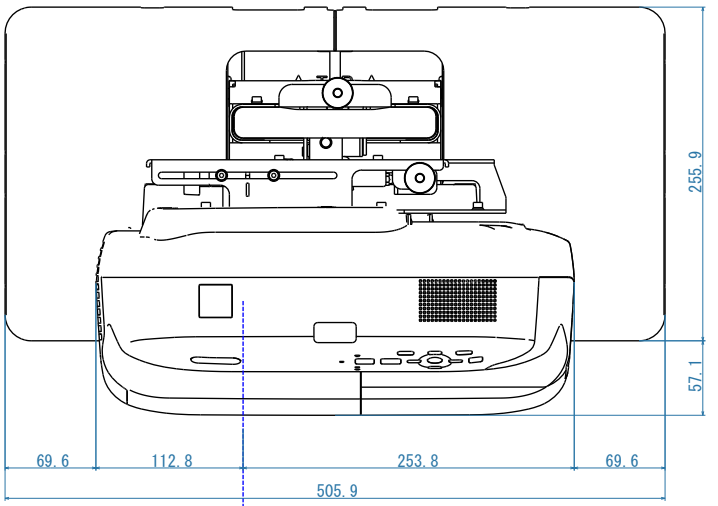
255.9
57.1
69.6
112.8
253.8
69.6
505.9

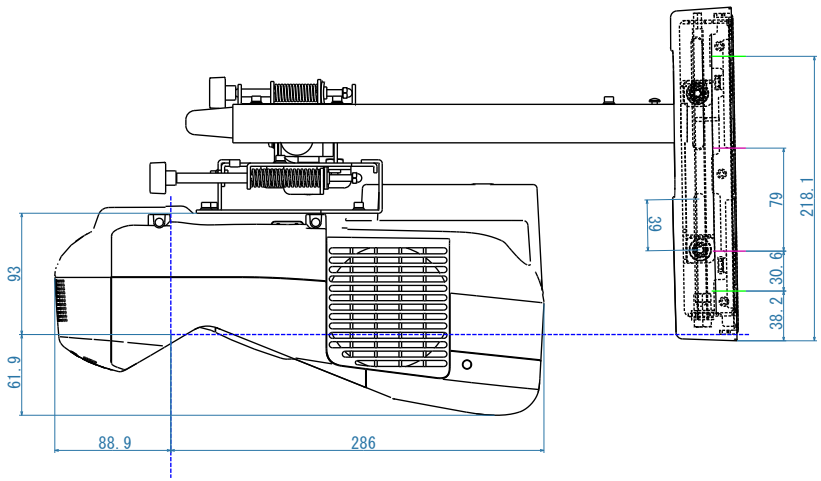
93
61.9
88.9
286
39
79
30.6
38.2
218.1

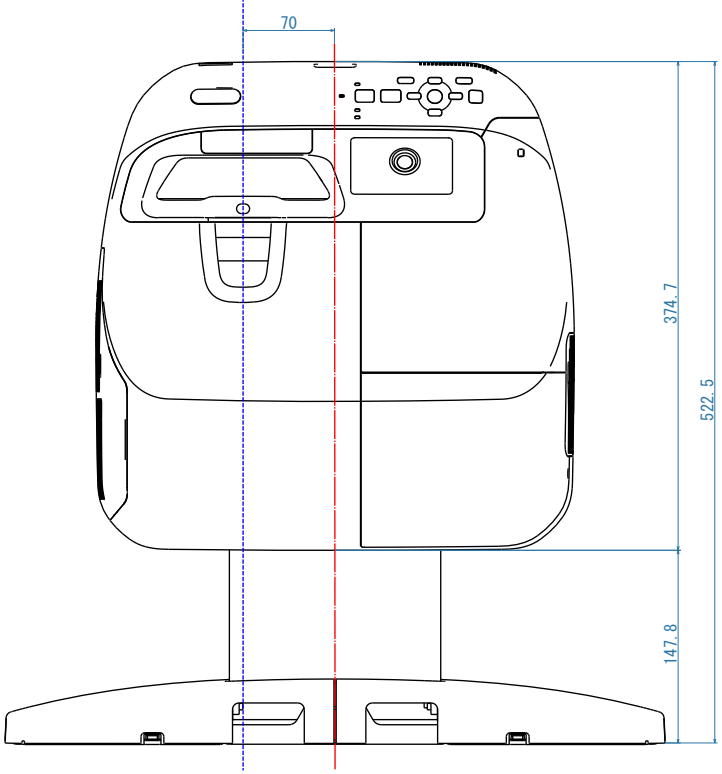
70
374.7
522.5
147.8