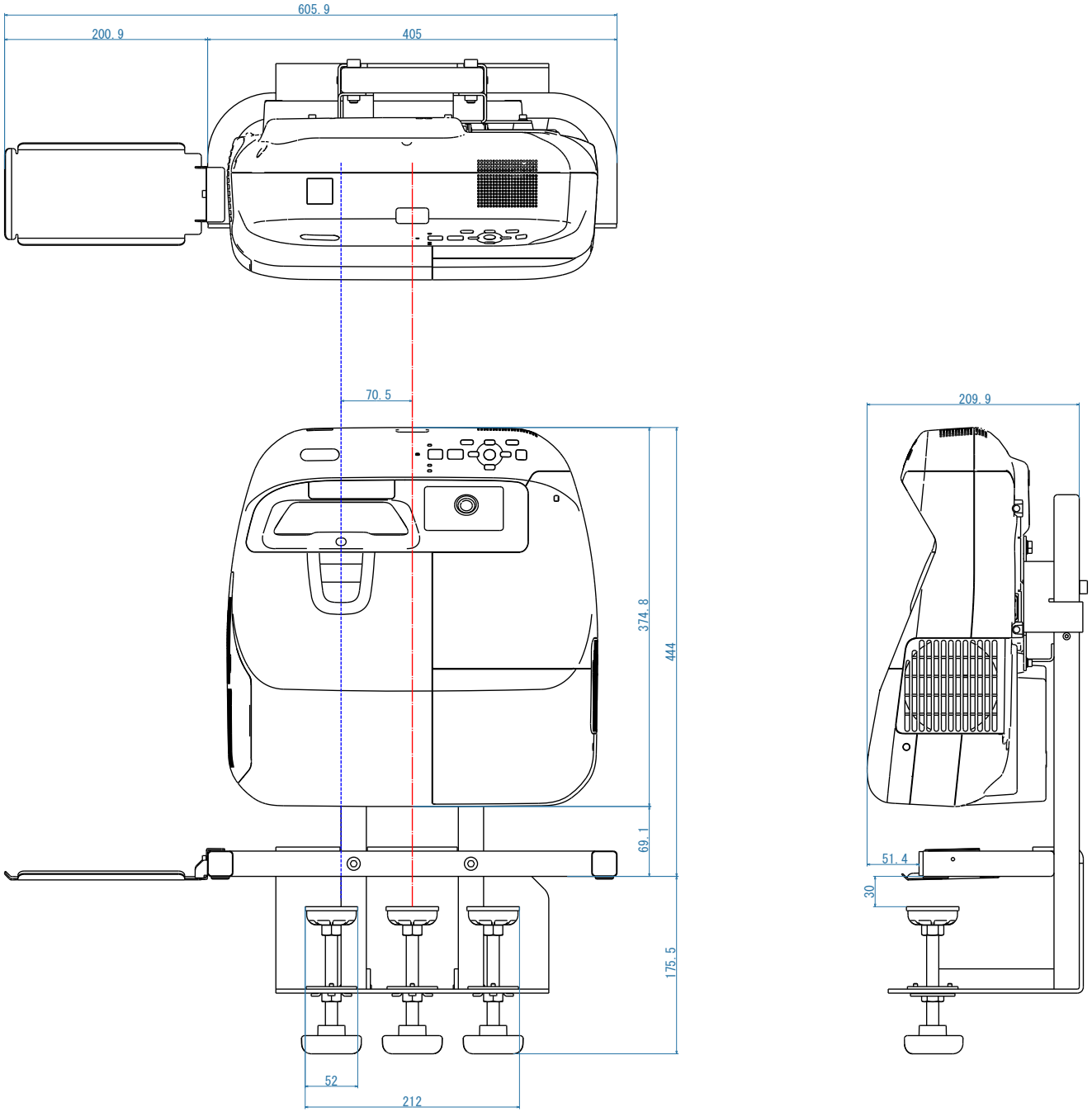
605.9
200.9
405
70.5
374.8
444
69.1
175.5
52
212
209.9
51.4
30