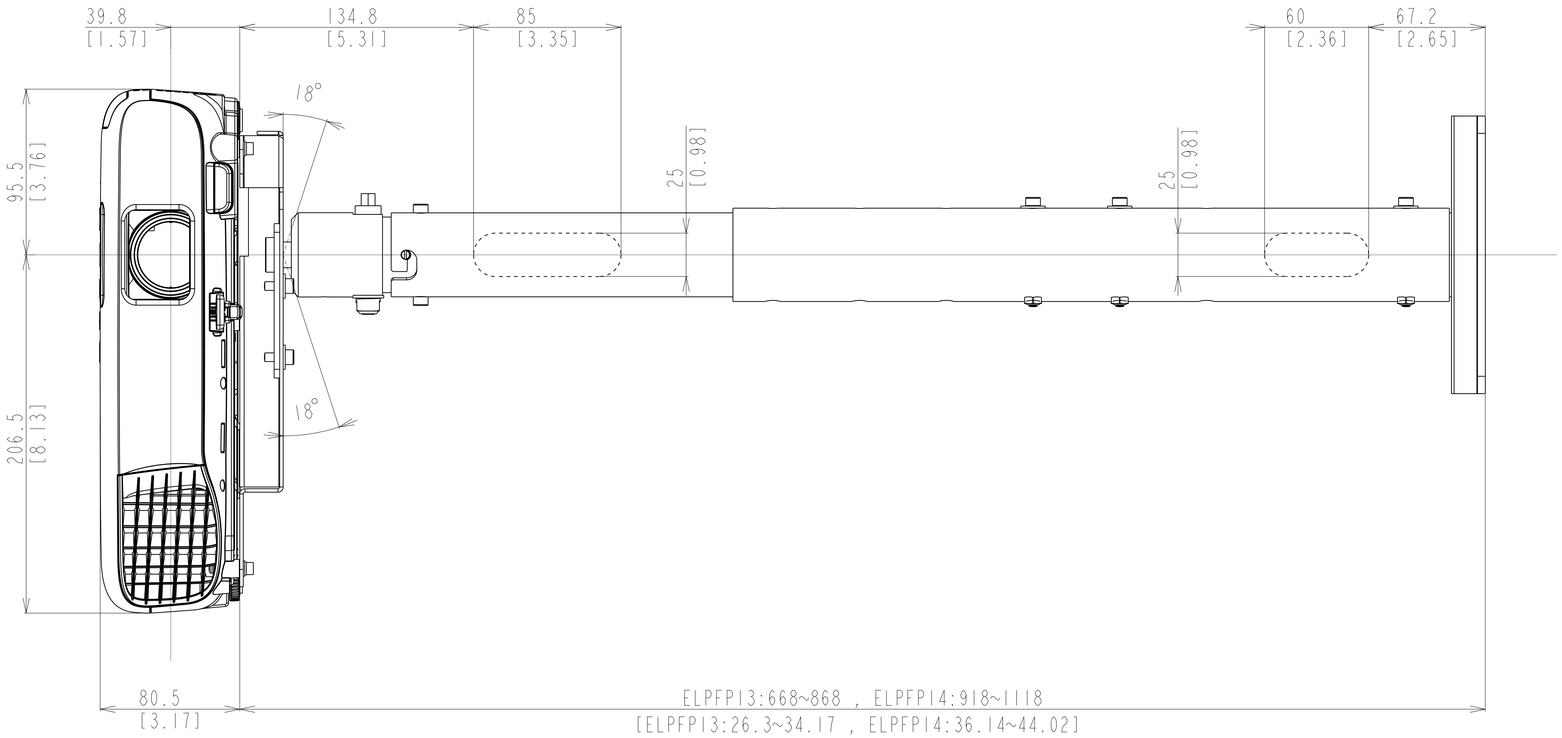

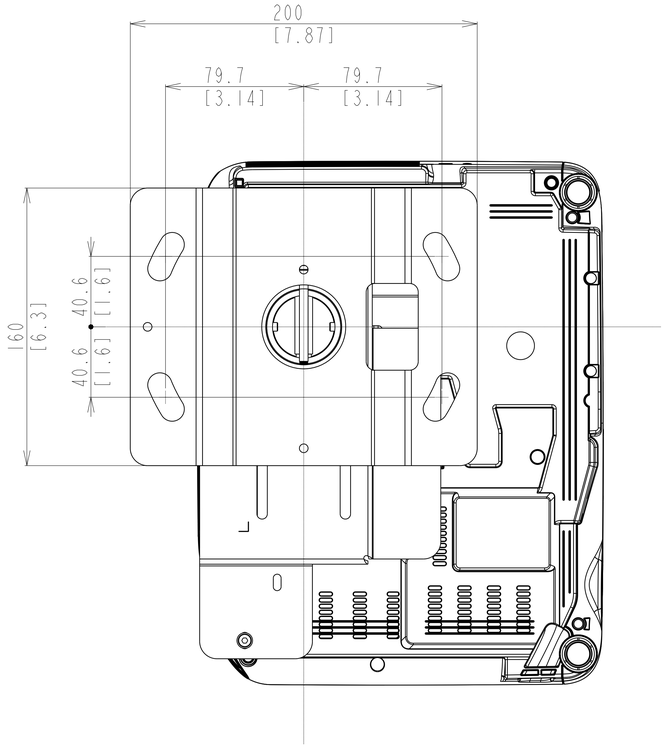

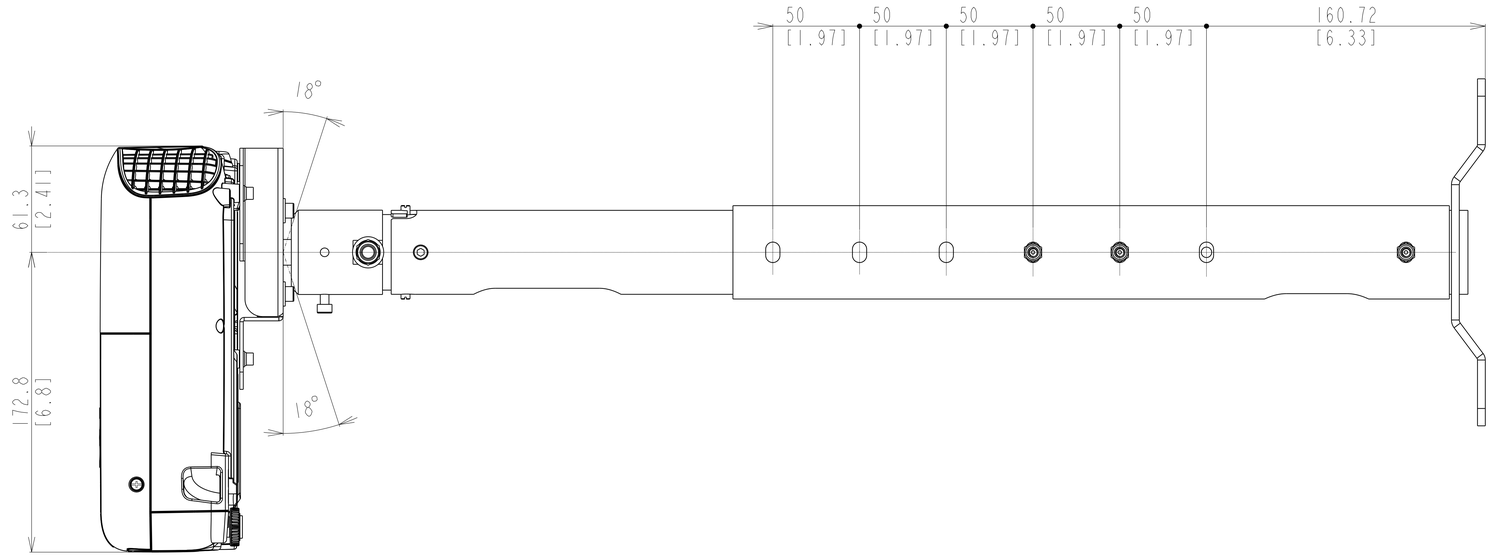

Notes:
Unit of Dimension
Upper: mm
Lower: [inch]