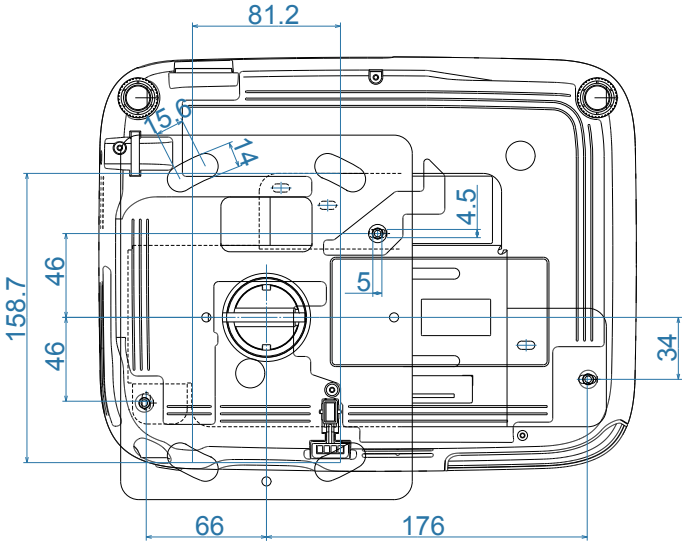
81.2
15.6
14
4.5
5
158.7
46
46
34
66
176

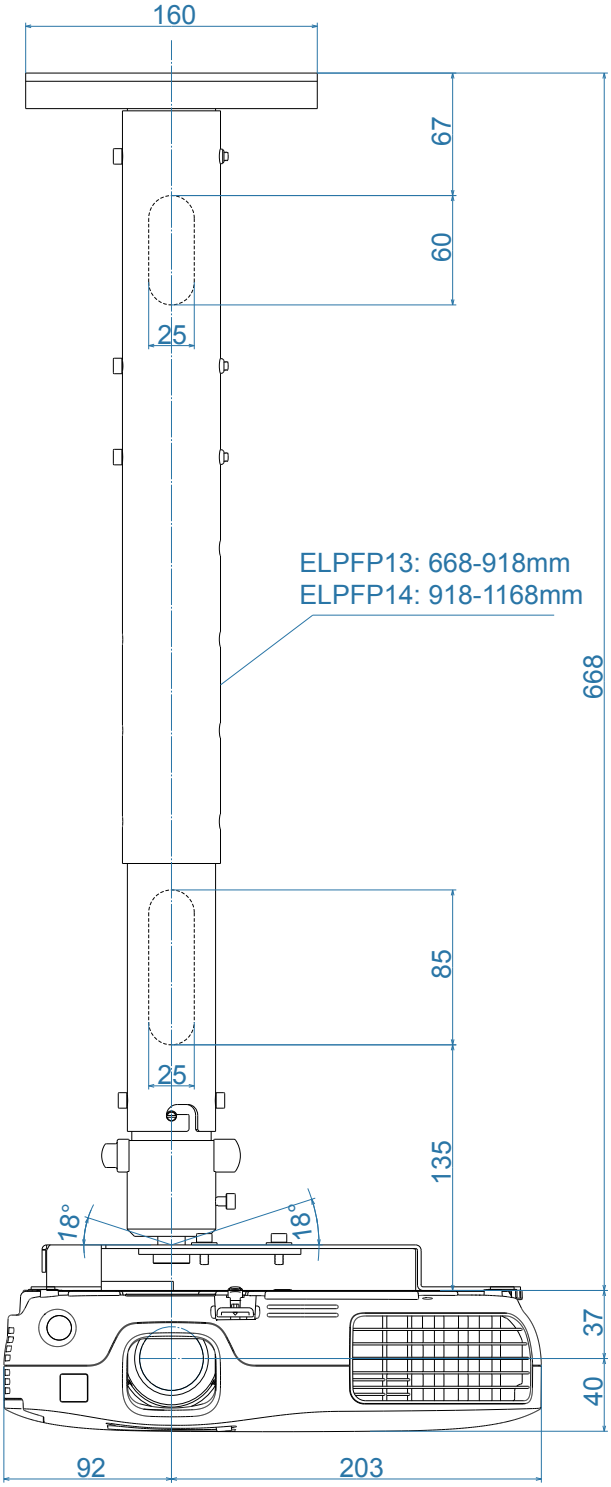
160
67
60
25
ELPFP13: 668-918mm
ELPFP14: 918-1168mm
668
85
25
135
18°
18°
37
40
92
203

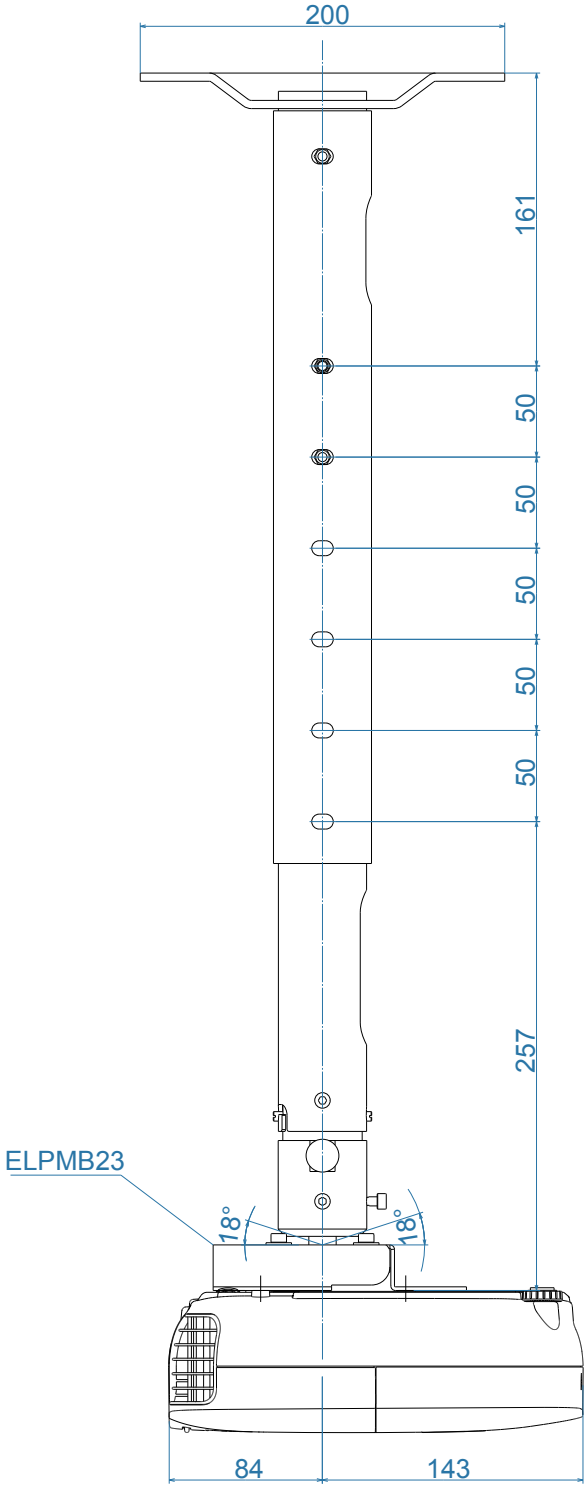
200
161
50
50
50
50
50
257
ELPMB23
18°
18°
84
143