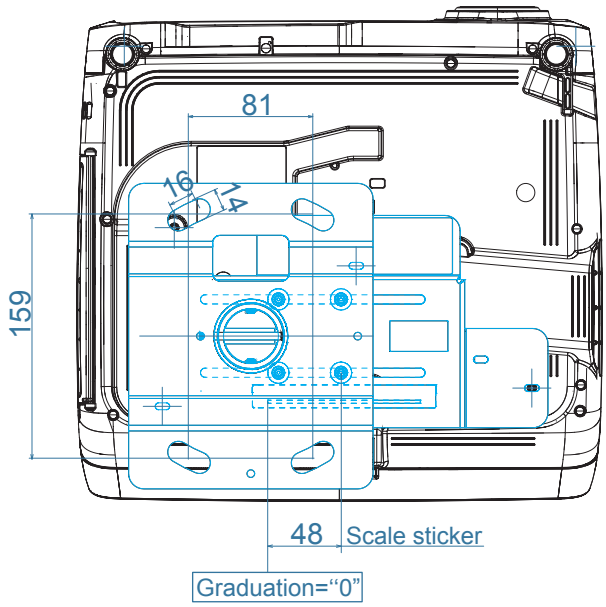
81
16
14
159
48
Scale sticker
Graduation="0"

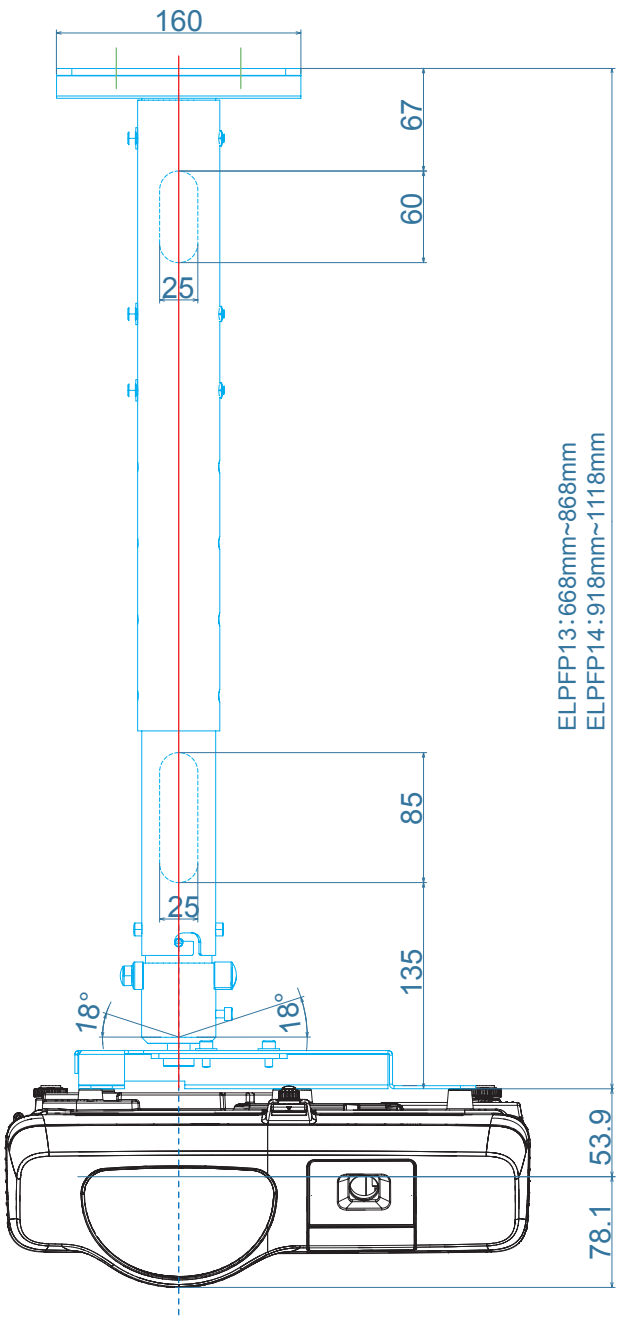
160
67
60
25
85
25
135
18°
18°
ELPFP13:668mm~868mm
ELPFP14:918mm~1118mm
53.9
78.1

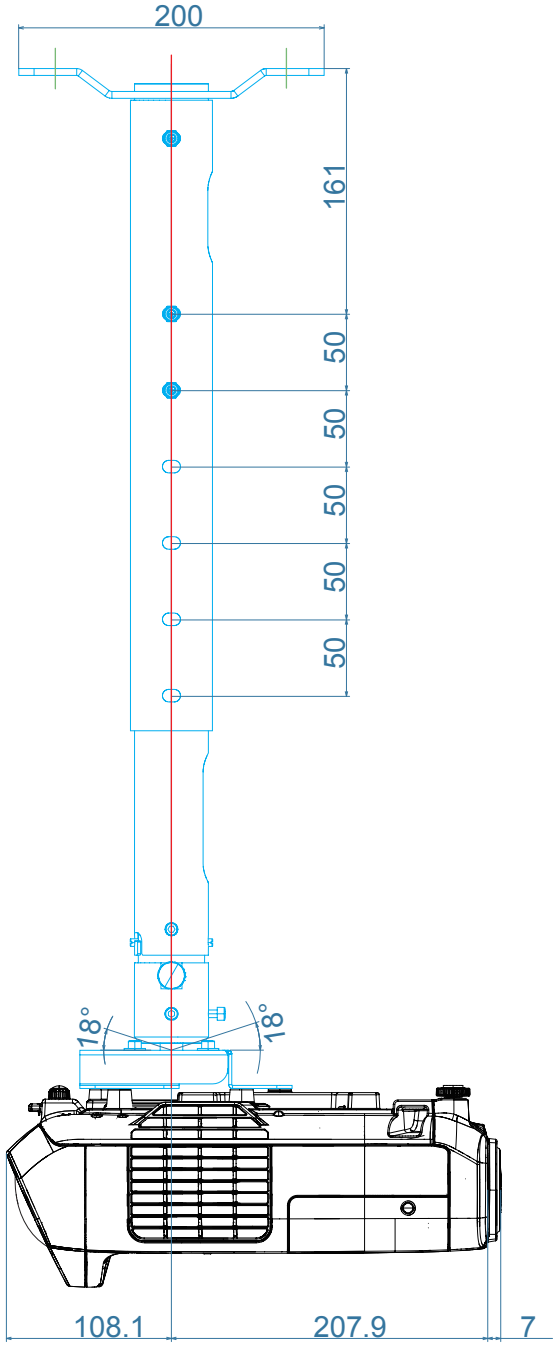
200
161
50
50
50
50
50
18°
18°
108.1
207.9
7