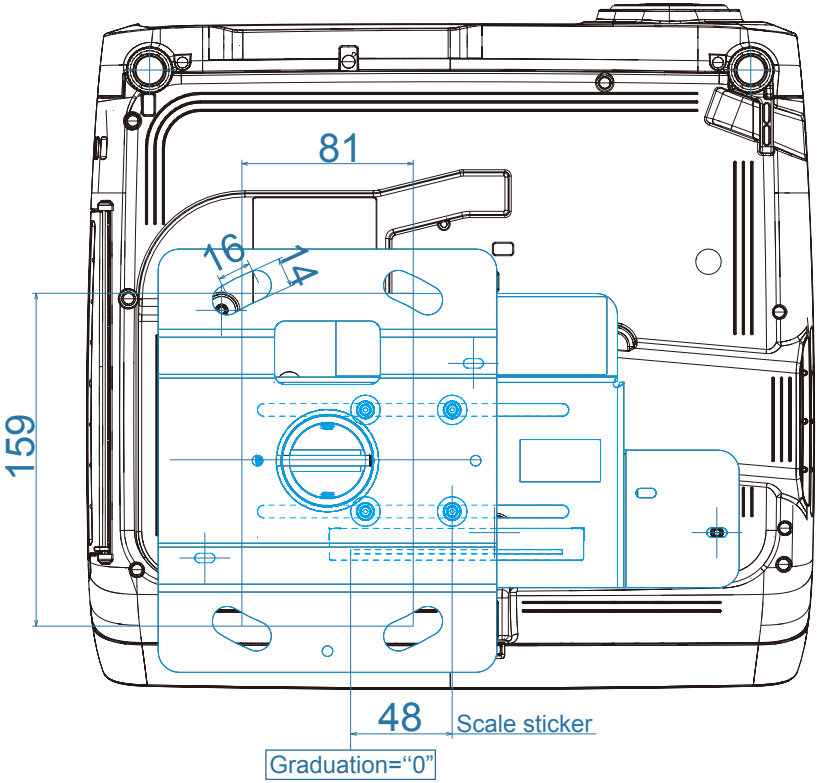
81
16
4
159
48
Scale sticker
Graduation="0"

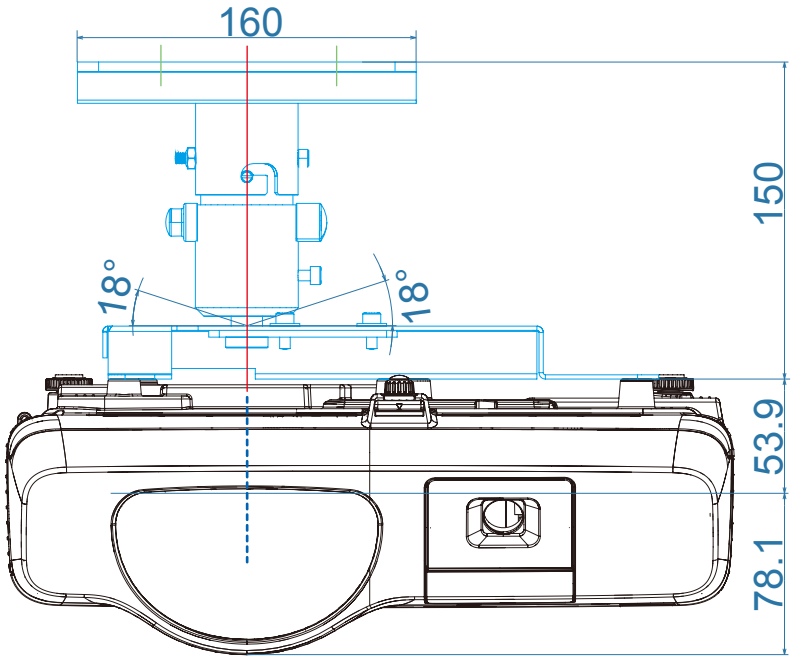
160
150
18°
18°
53.9
78.1

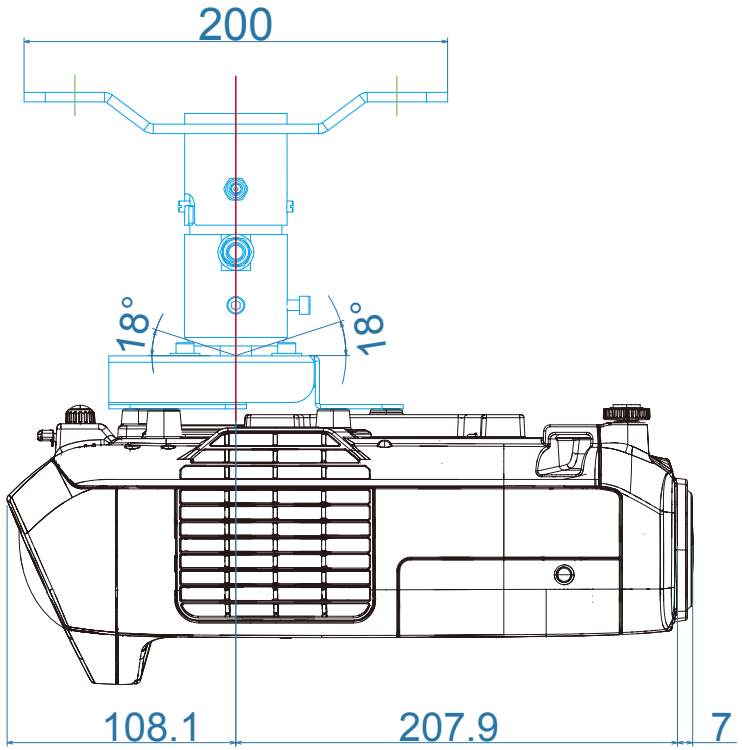
200
18°
18°
108.1
207.9
7