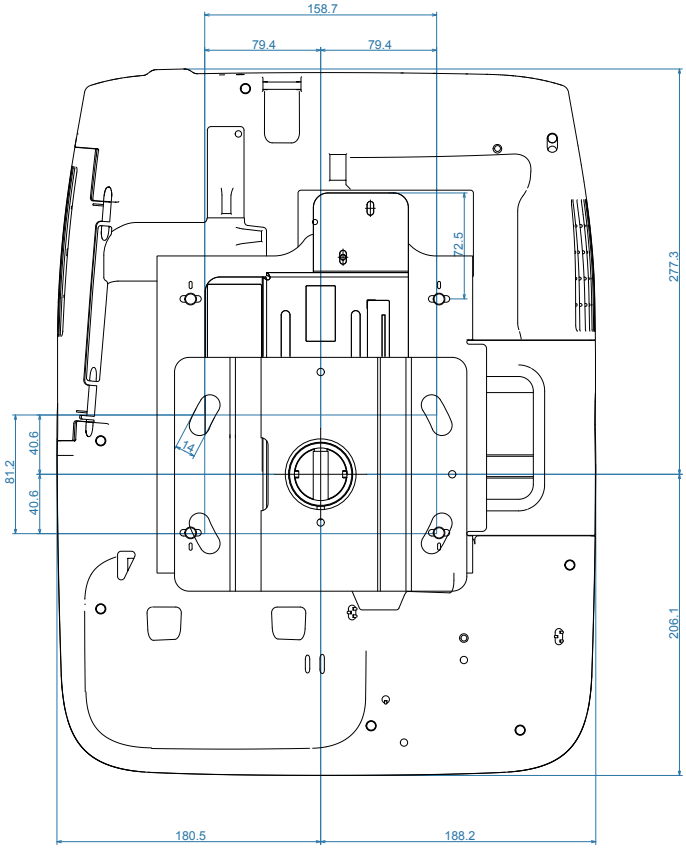
158.7
79.4
79.4
72.5
277.3
81.2
40.6
40.6
14
206.1
180.5
188.2

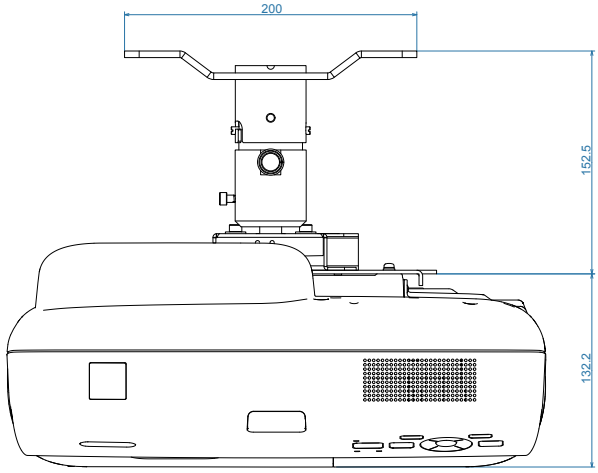
200
152.5
132.2

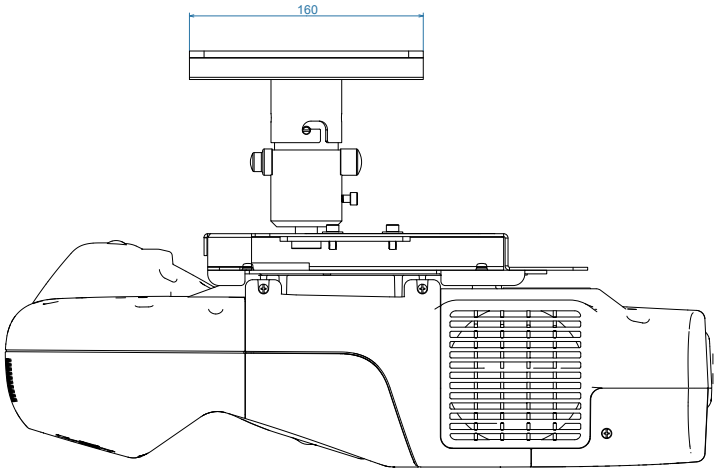
160