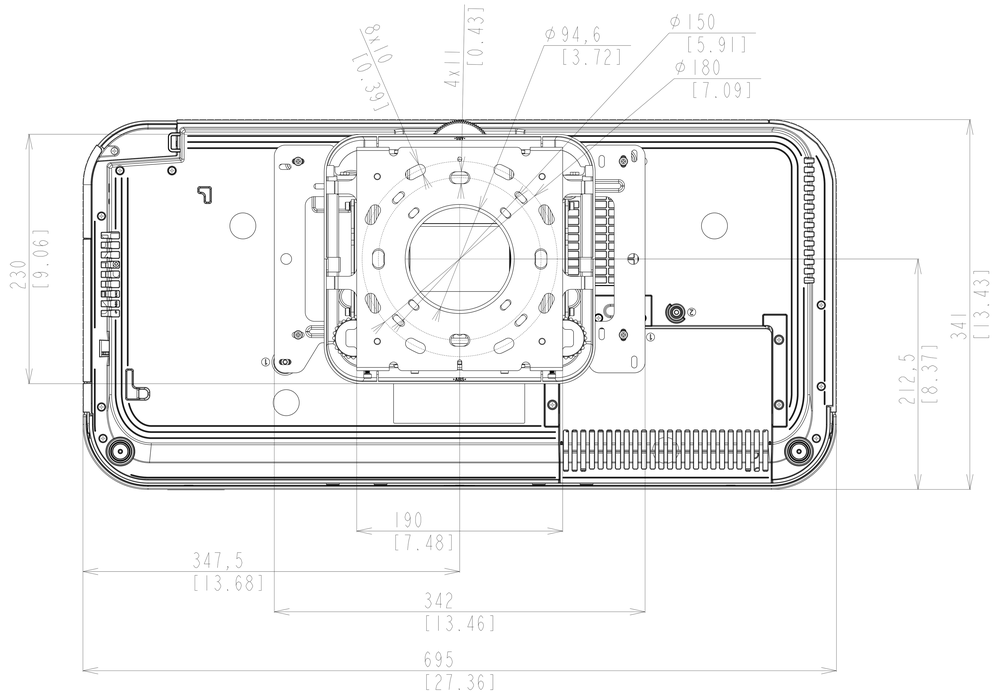

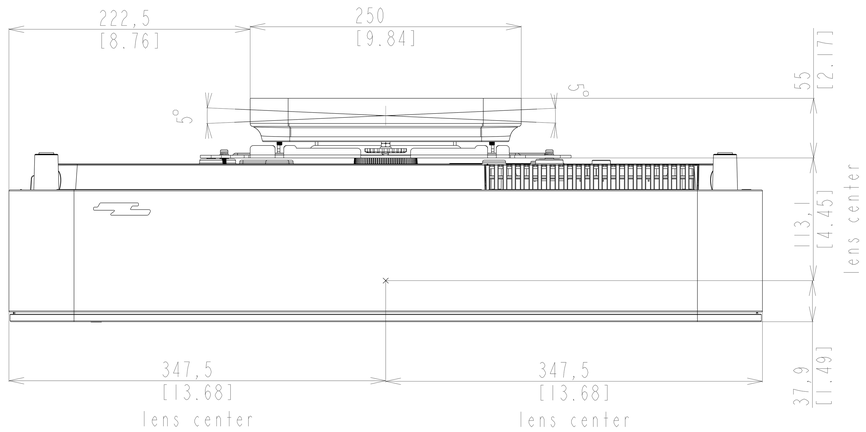

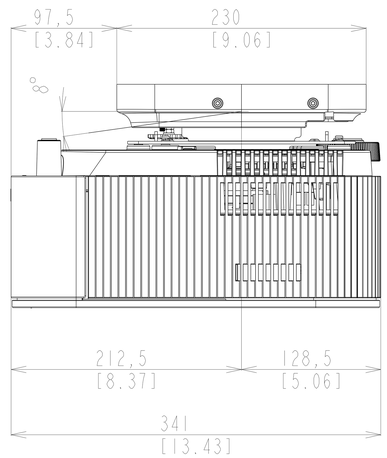

NOTES
Unit of dimension
Upper : mm
Lower : inch