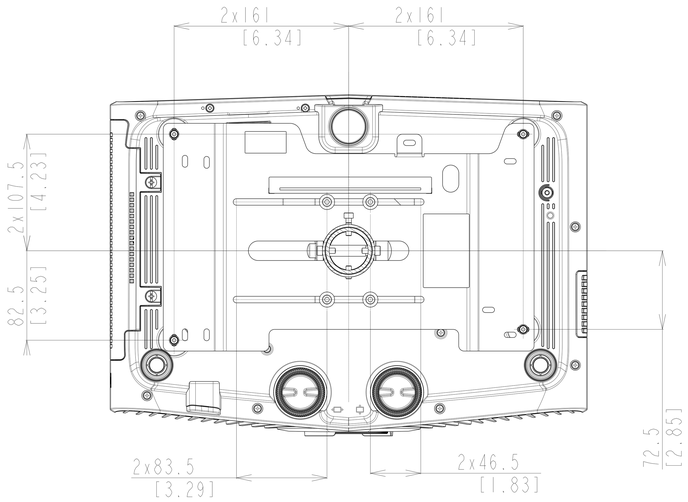

断面/Section A-A

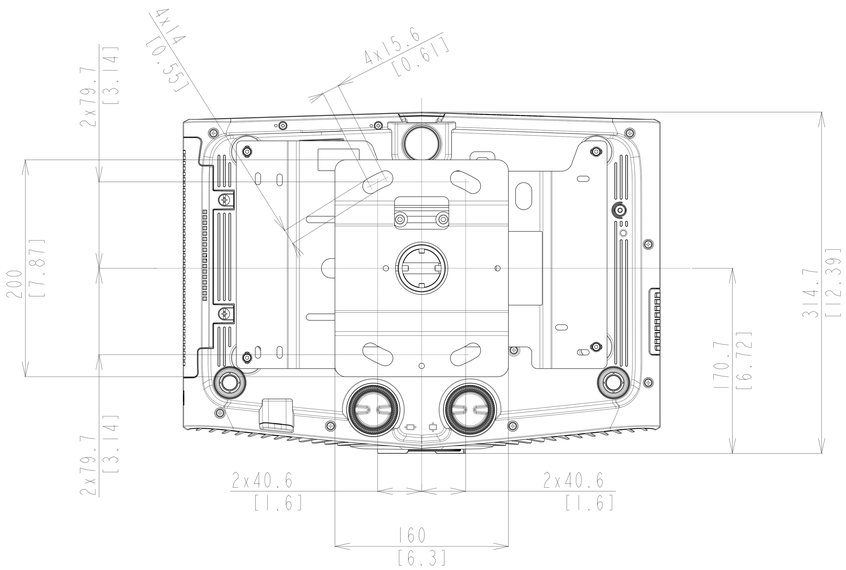

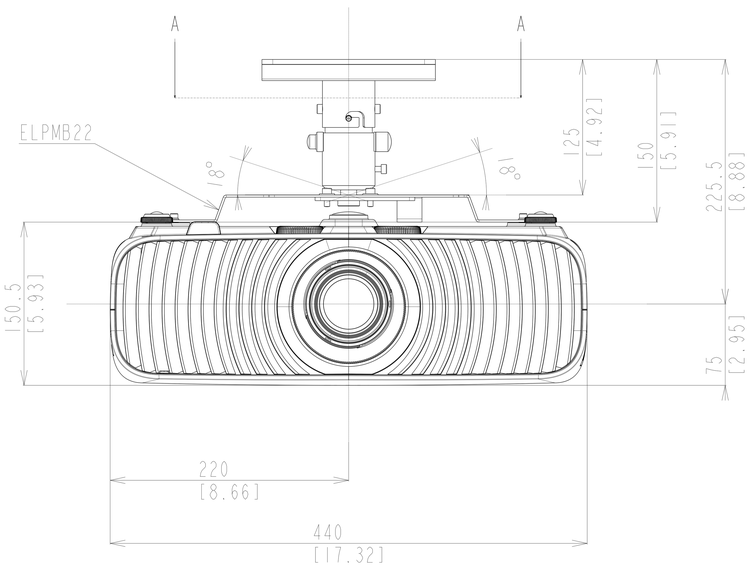

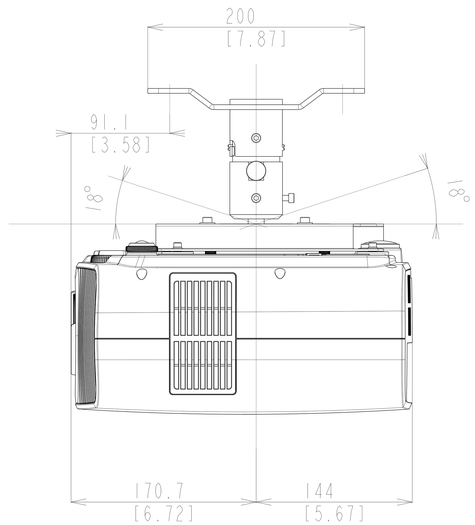

Notes
Unit of dimension
Upper : mm
Lower : inch