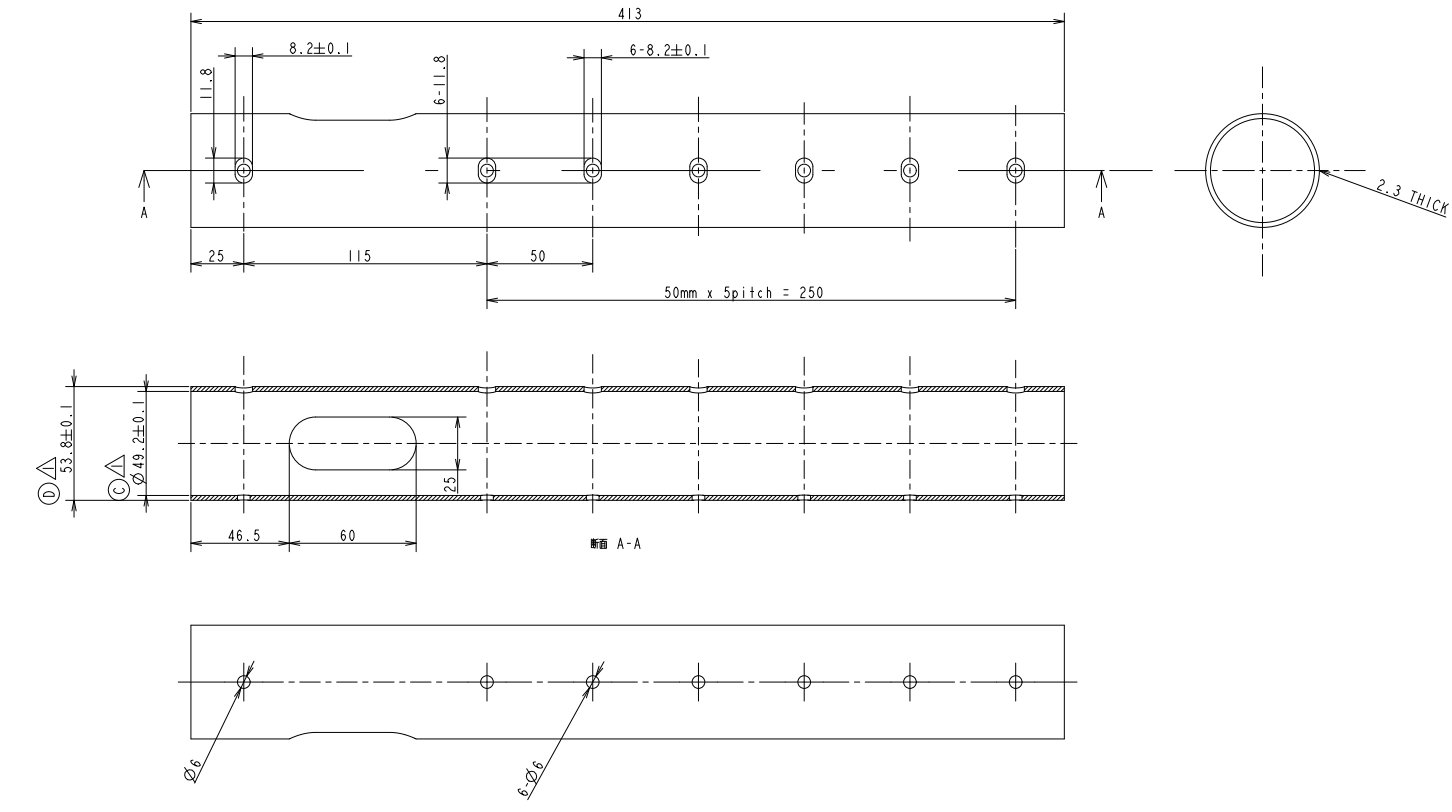
413
8.2±0.1
6-8.2±0.1
11.8
6-11.8
A
A
25
115
50
50mm x 5pitch = 250
2.3 THICK
D
53.8±0.1
C
Ø49.2±0.1
25
46.5
60
断面 A-A
Ø6
6-Ø6

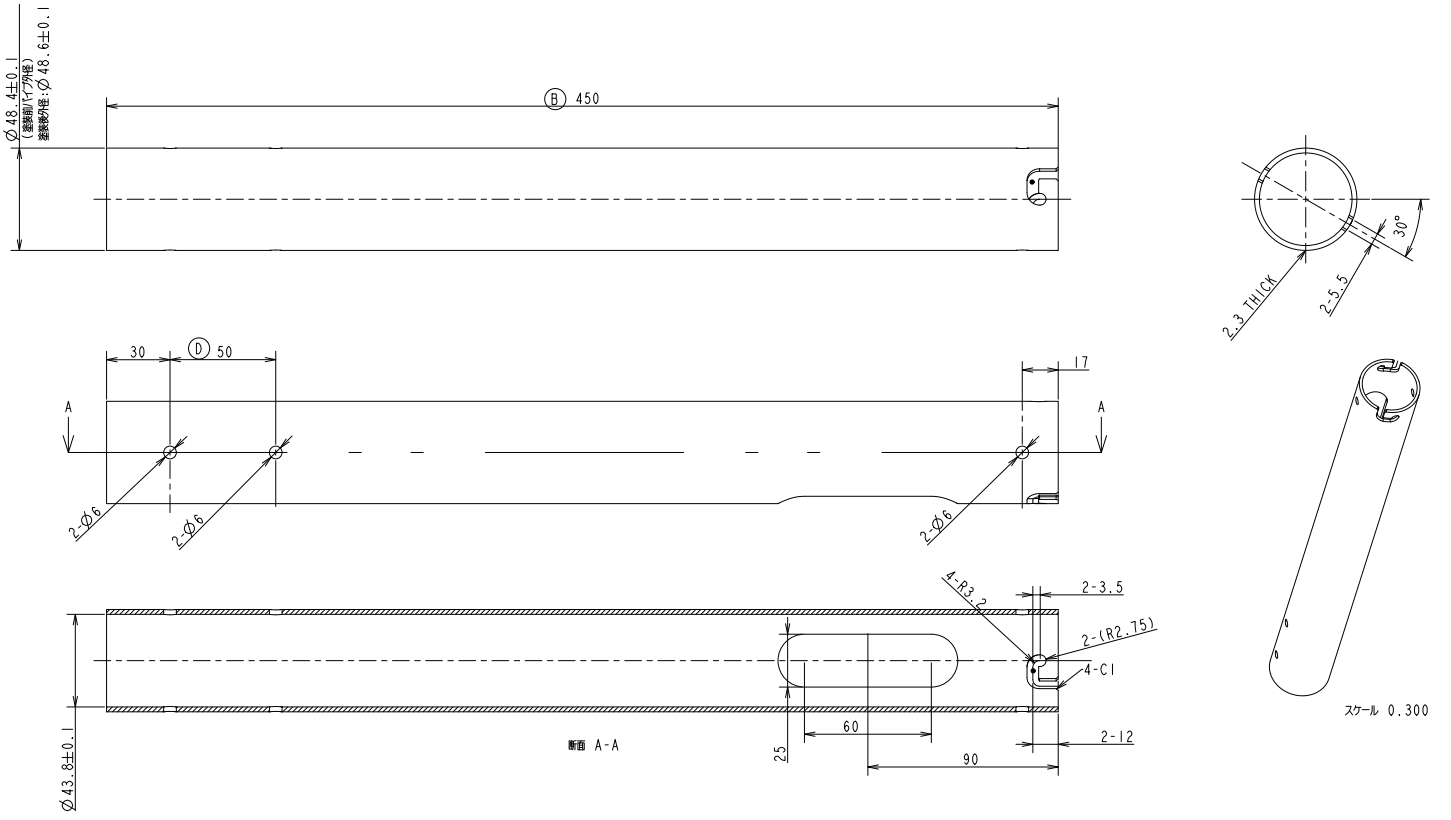
Ø48.4±0.1
(塗装面/パイプ外径)
塗装後内径:Ø48.6±0.1
B 450
30°
2.3 THICK
2-5.5
30
D 50
17
A
A
2-Ø6
2-Ø6
2-Ø6
4-R3.2
2-3.5
2-(R2.75)
4-C1
60
2-12
90
25
断面 A-A
Ø43.8±0.1
スケール 0.300