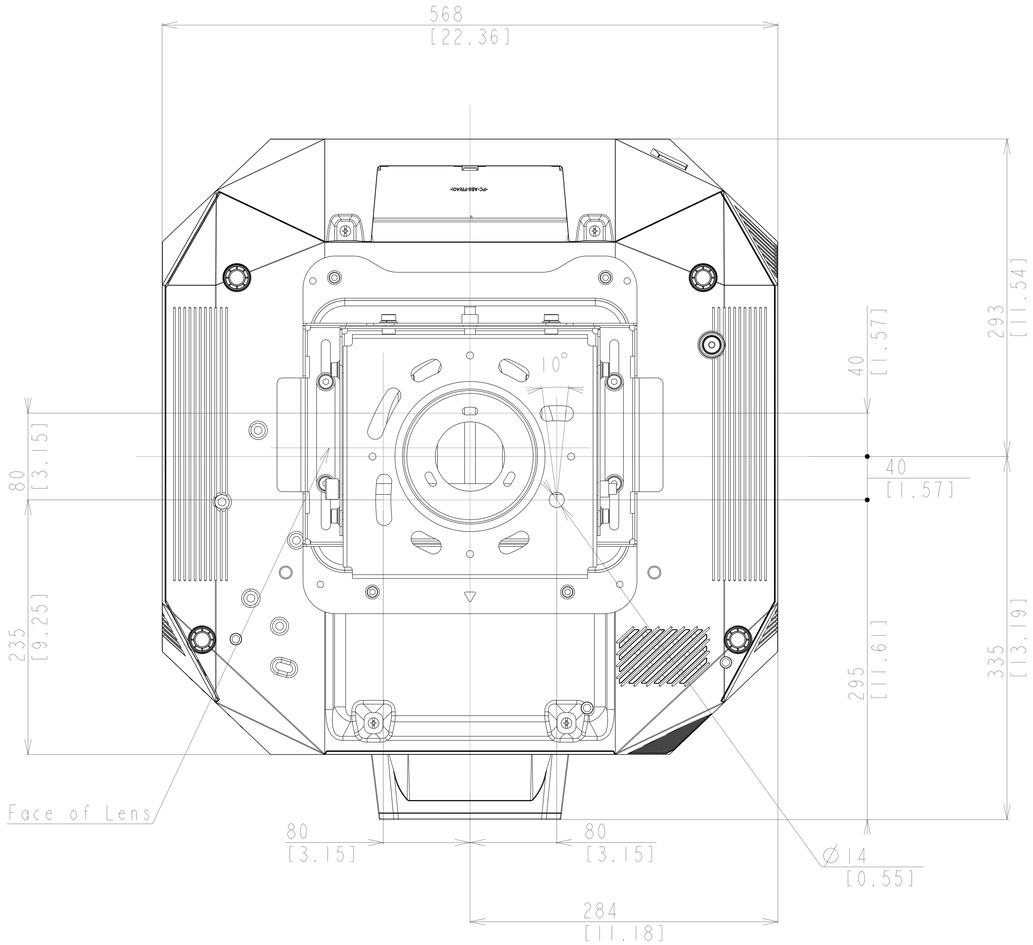
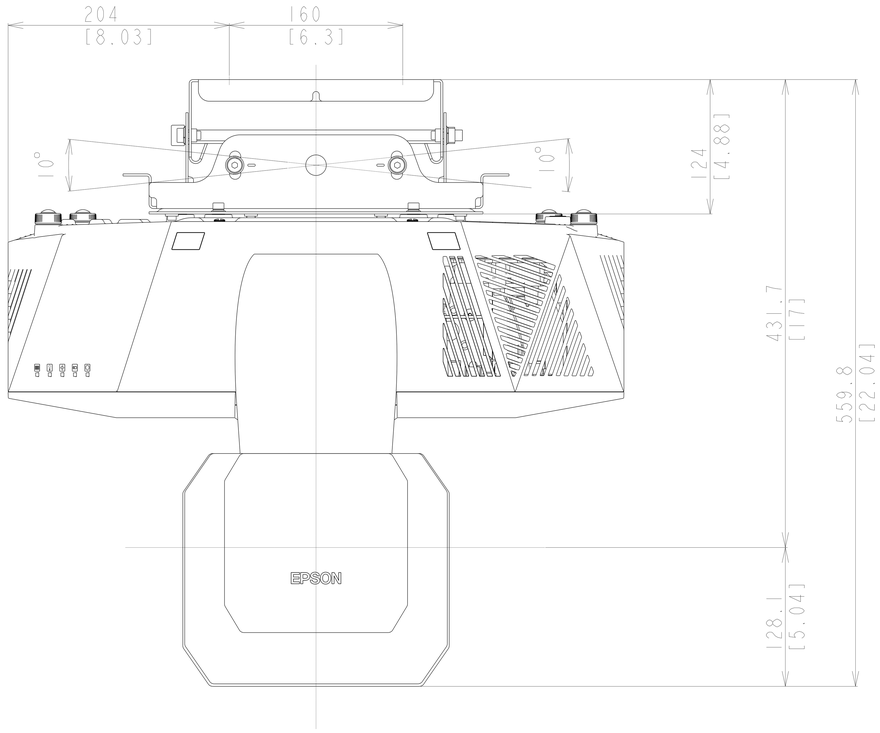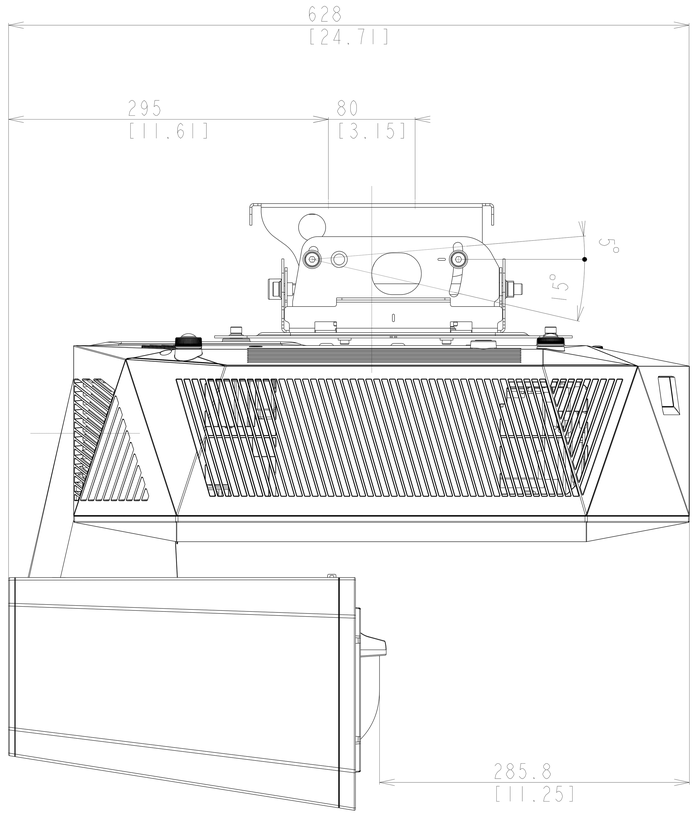
Notes
- Unit of dimension
  - Upper : mm
  - Lower : inch
- Lens:ELPLX02S