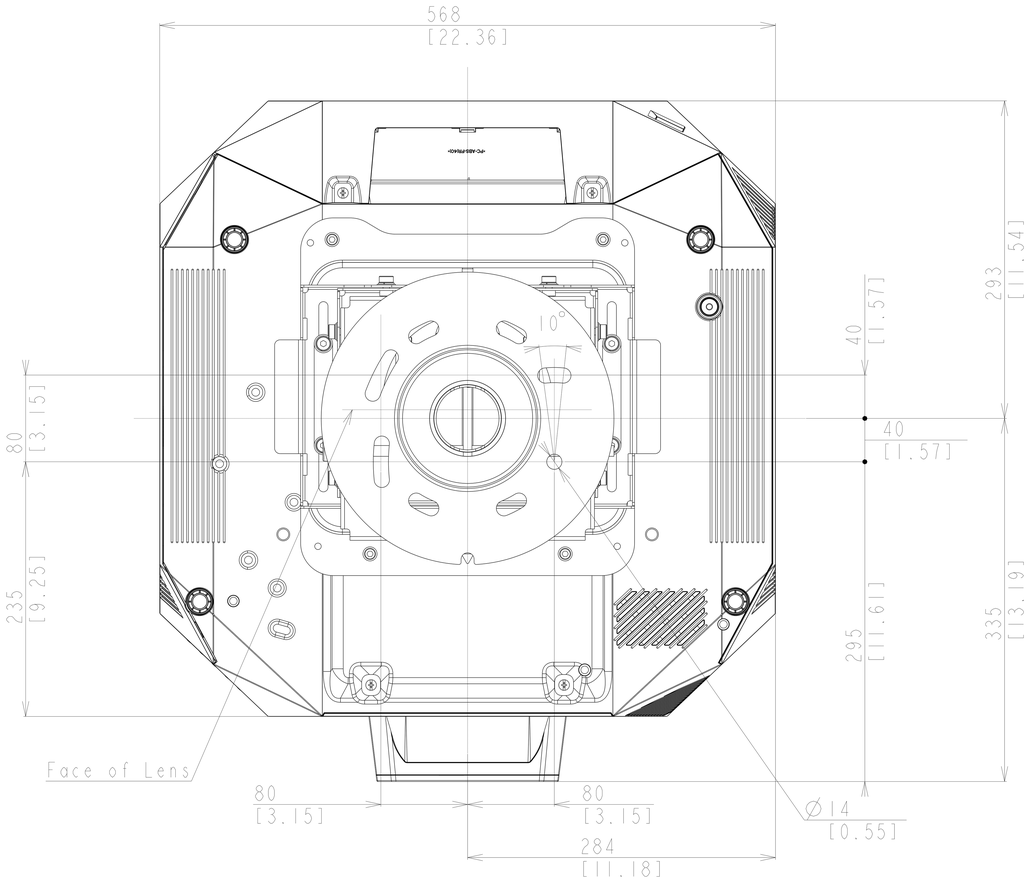
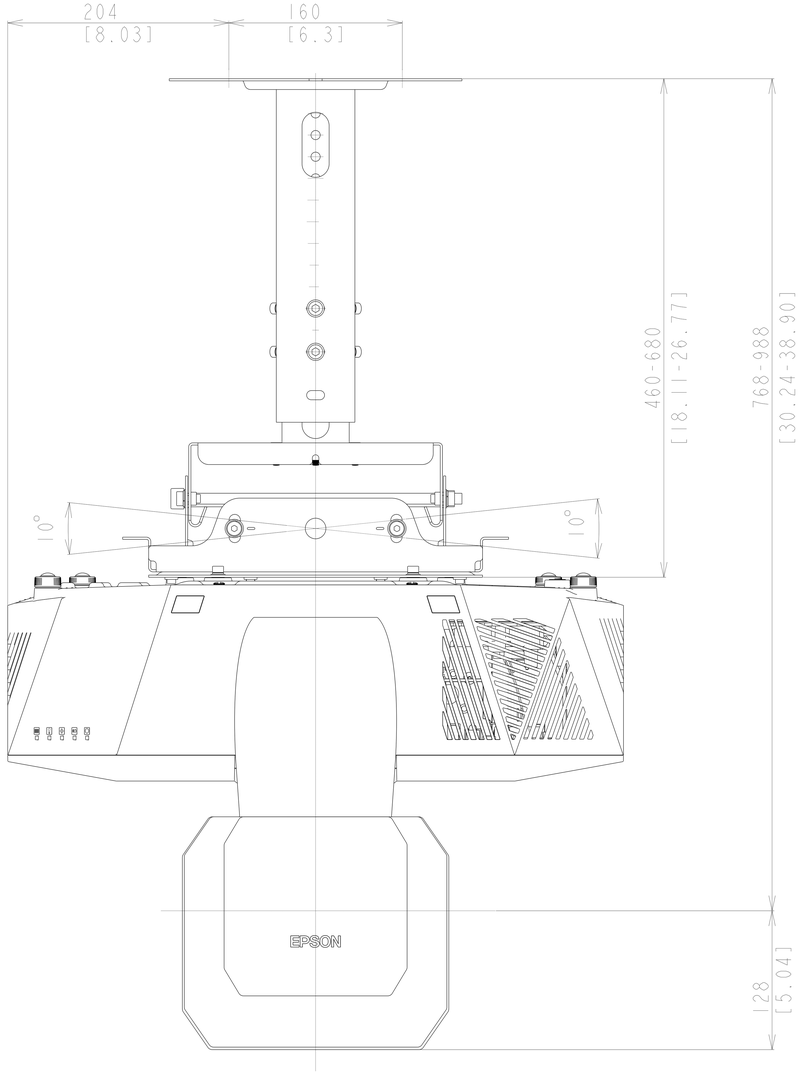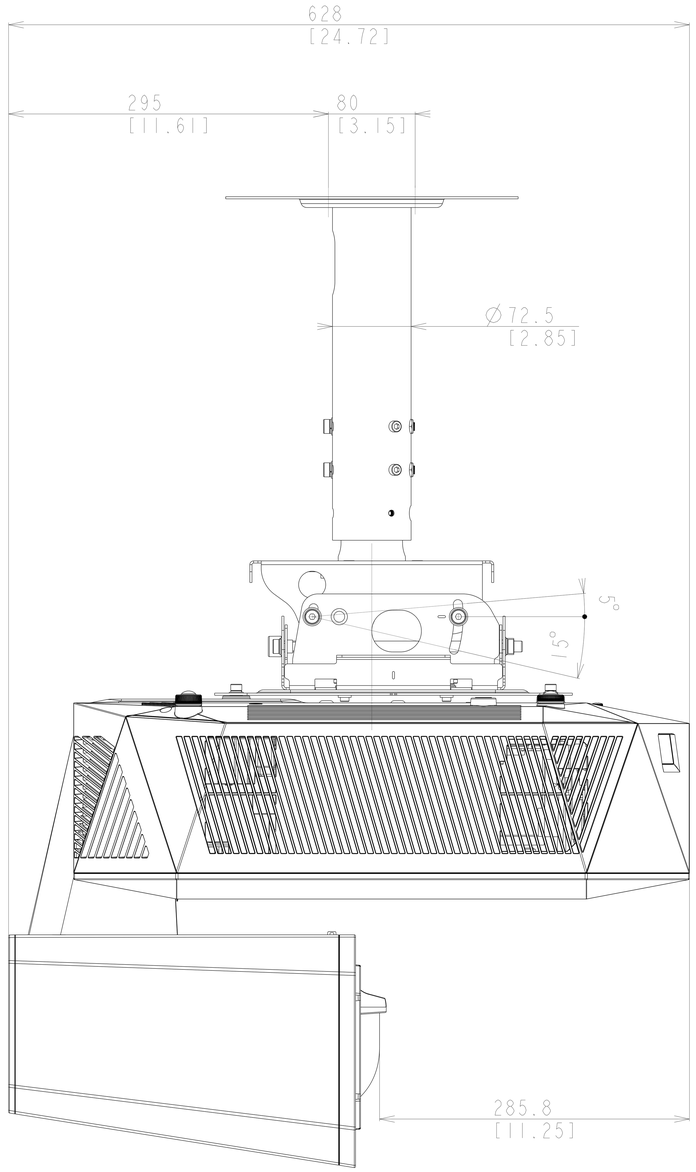
Notes
- Unit of dimension
  Upper : mm
  Lower : inch
- Lens:ELPLX02S