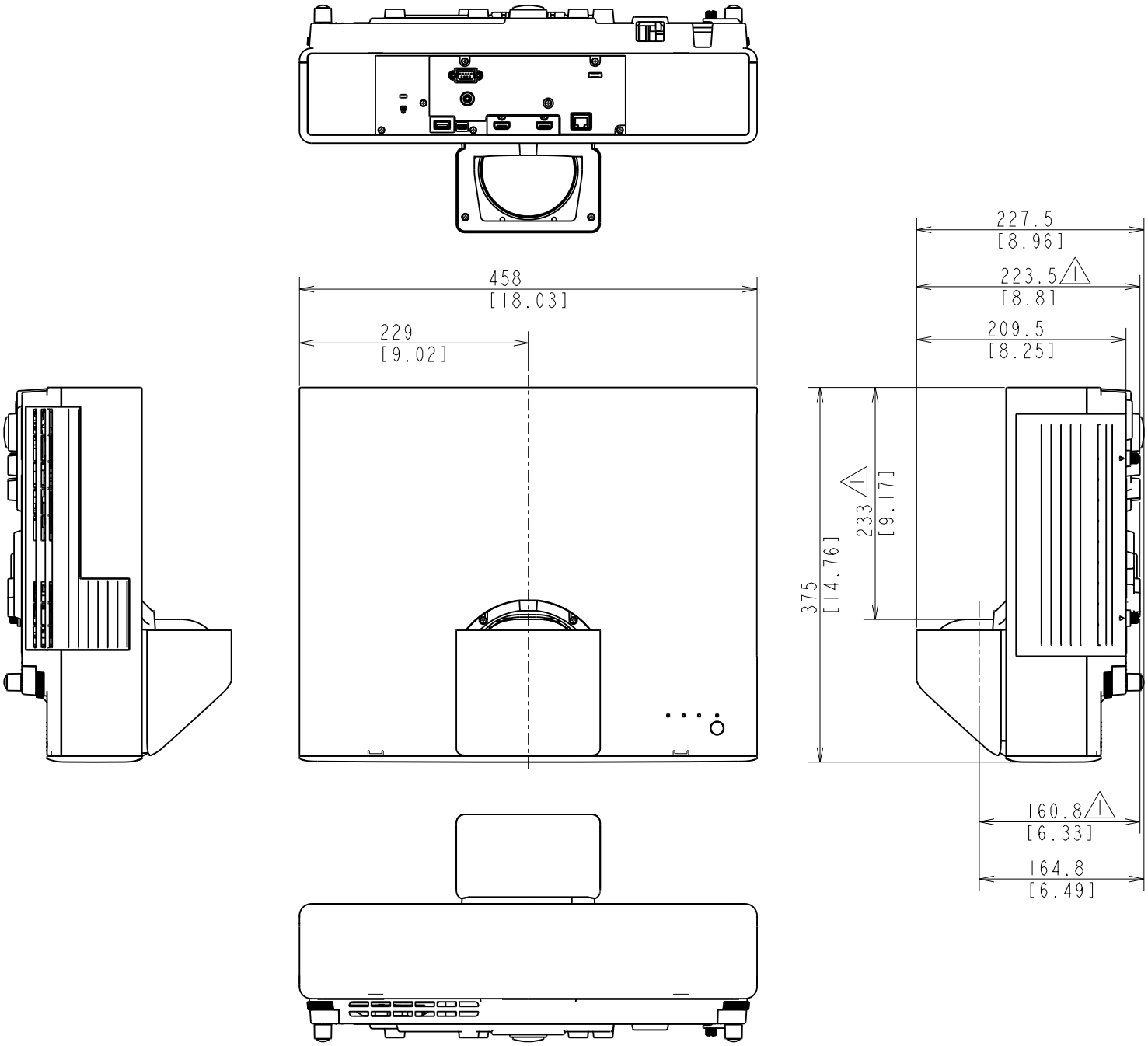

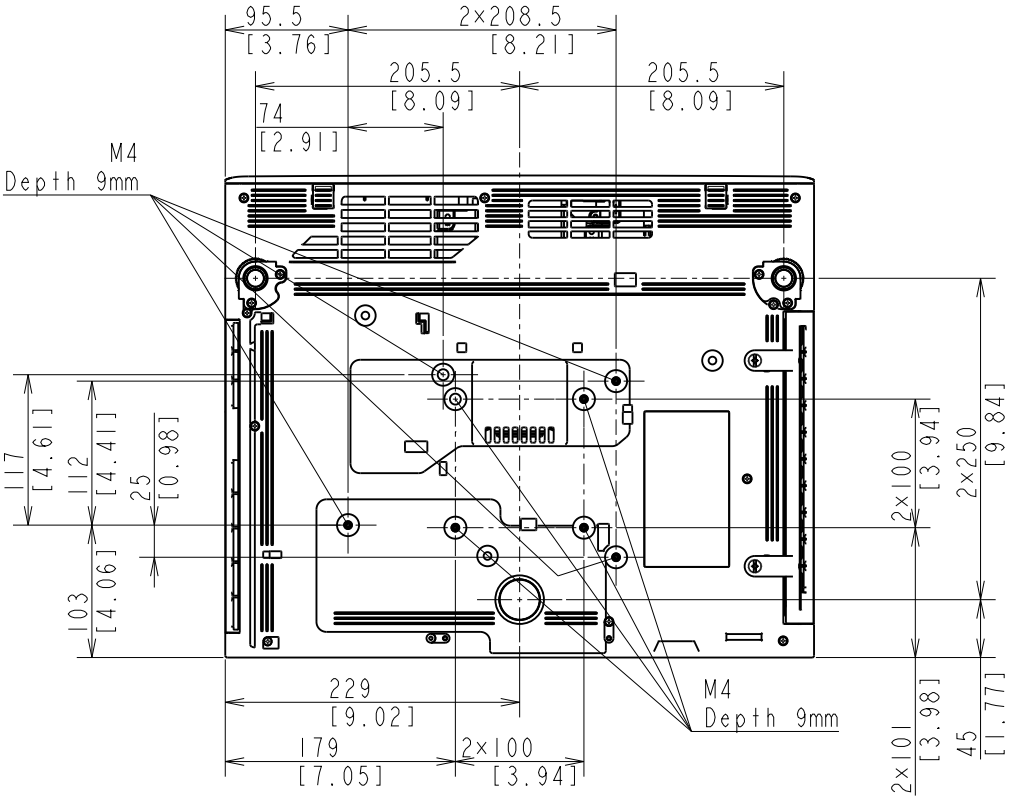

Notes
Unit of Dimension
Upper:mm
Lower:[inch]