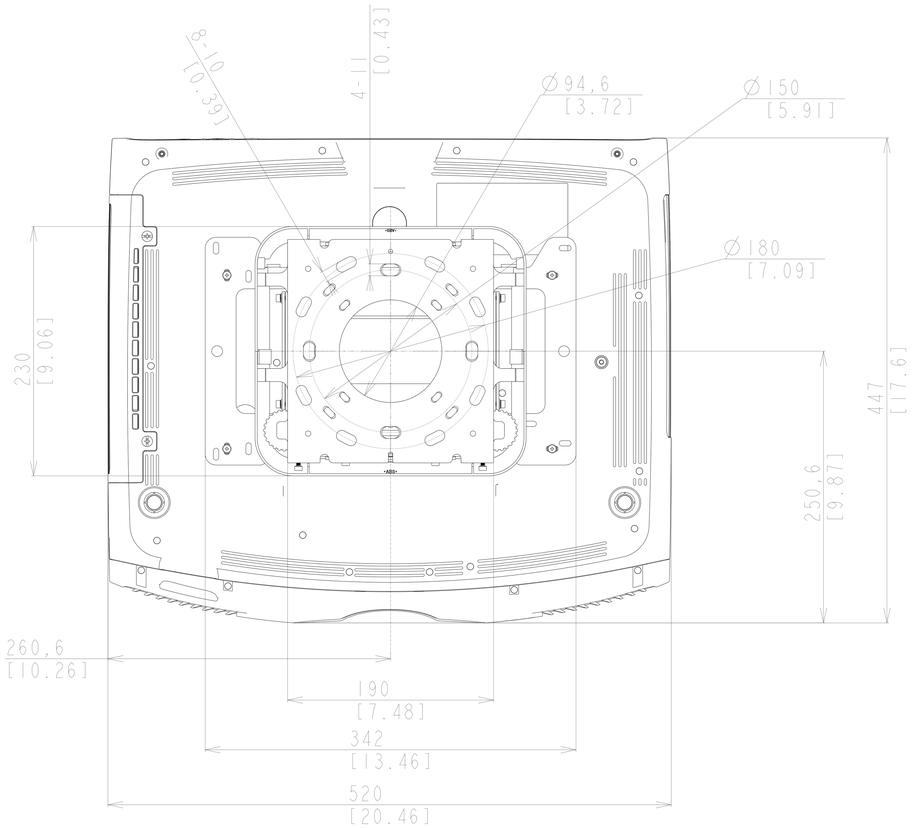

Scale: 1:1
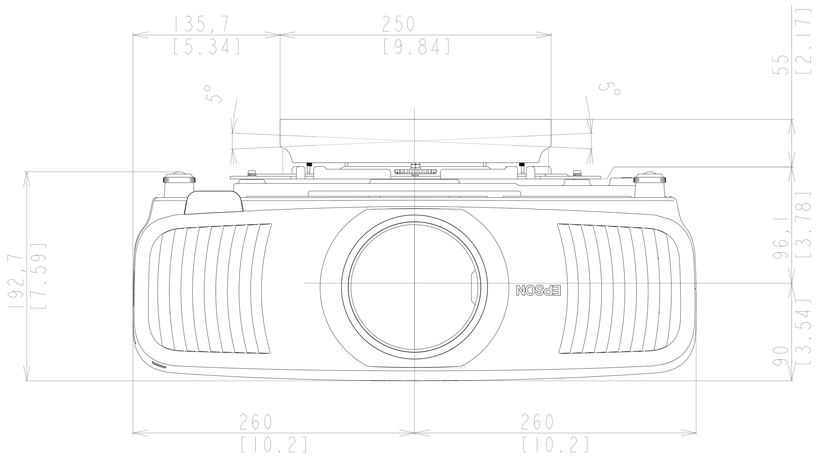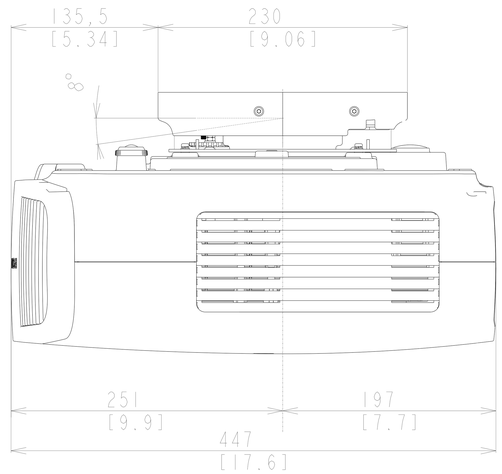
Notes
Unit of dimension
Upper: mm
Lower: inch