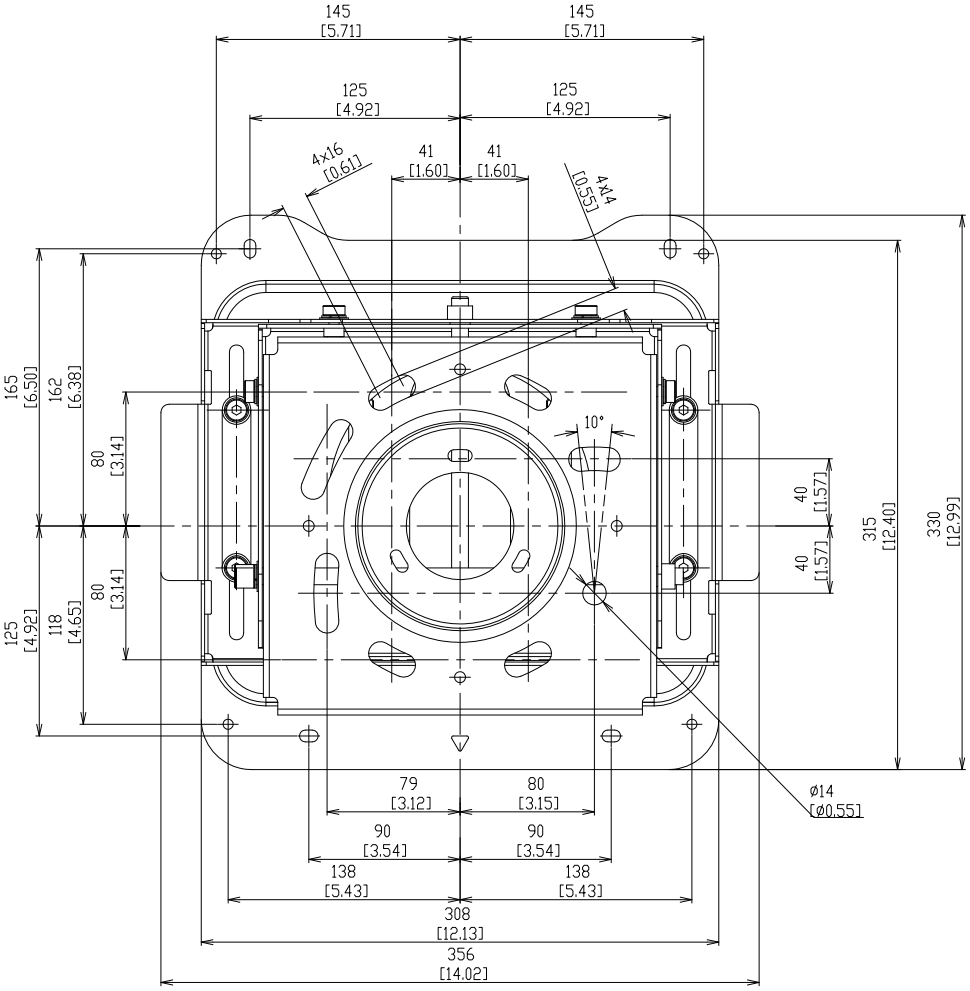


Notes
Unit of dimension
Upper: mm
Lower: inch
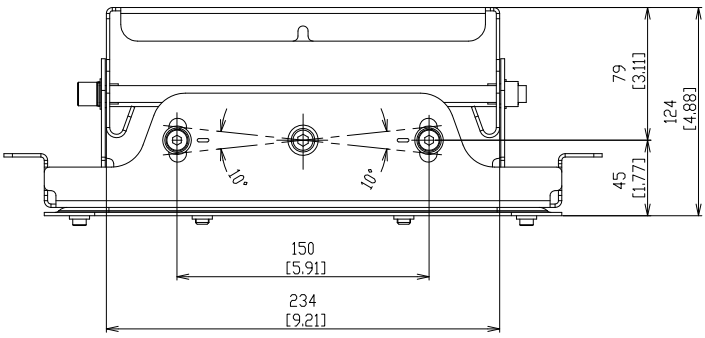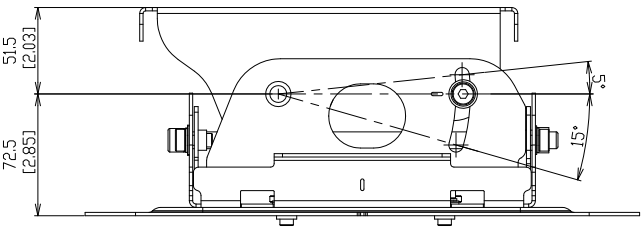
Scale:1/1