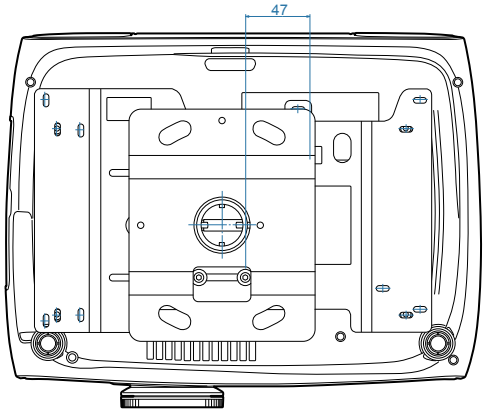
47

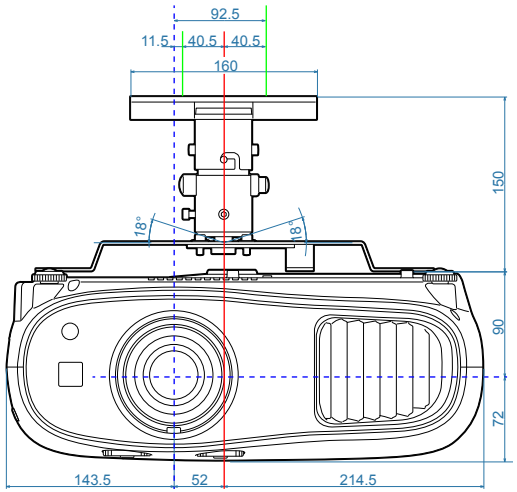
92.5
11.5
40.5
40.5
160
150
18°
18°
90
72
143.5
52
214.5

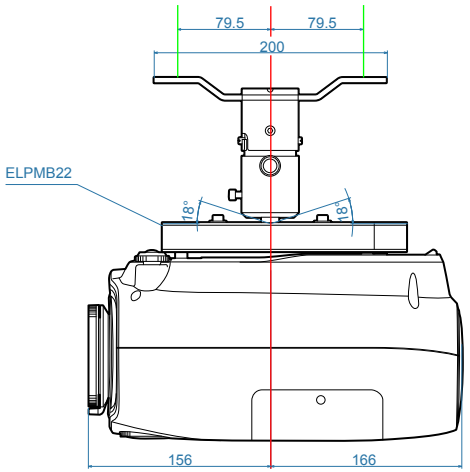
79.5
79.5
200
ELPMB22
18°
18°
156
166